Desktop Personal Computer

Owner's Manual

THE QUALITY GOES IN BEFORE THE NAME GOES ON

REGULATORY INFORMATION

Warning —— This equipment has been certified to comply with the limits for a Class B computing device, pursuant to Subpart J of Part 15 of FCC Rules. Only peripherals (computer input/output devices, terminals, printers, etc.) certified to comply with the Class B limits may be attached to this computer. Operation with non-certified peripherals is likely to result in interference with radio and TV reception.

NOTE: In order to meet Class B emission limits, the user must comply with the following requirements:

1. The I/O cables that interconnect between this computer and any peripheral (such as a printer, modem, etc.) must be shielded.
2. The line (power) cord shipped with the computer is shielded. If you replace the line cord, be sure to use only a shielded line cord.

This equipment generates and uses radio frequency energy for its operation and if not installed and used properly, that is, in strict accordance with the instruction manual, may cause interference with radio and television reception. It has been tested and found to comply with the RF emission limits for a Class B computing device which is intended to provide reasonable protection against such interference in a residential installation. However, there is no guarantee that interference will not occur in a particular installation. If this equipment does cause interference with radio or television reception, which can be determined by turning the equipment off and on, the user is encouraged to try to correct the interference by one or more of the following measures:

- Move the computing device away from the receiver being interfered with.
- Relocate (turn) the computing device with respect to the receiver.
- Reorient the receiver's antenna.
- Plug the computing device into a different AC outlet so that the computing device and receiver are on different branch circuits.
- Disconnect and remove any I/O cables that are not being used. (*Unterminated* I/O cables are a potential source of high RF emission levels.)
- Unplug and remove any circuit boards that are not being used. (Here again, *unterminated* cards can be a source of potential interference.)
- Be certain that the computing device is plugged into grounded outlet receptacles. (Avoid using AC cheater plugs. Lifting of the power cord ground may increase RF emission levels and may also present a lethal shock hazard to the user.)

If you need additional help, consult your dealer or ask for assistance from the manufacturer. Customer service information may be found in the "Maintenance and Servicing" chapter of this manual. You may also find the following booklet helpful: How to Identify and Resolve Radio-TV Interference Problems. This booklet is available from the US Government Printing Office, Washington, D.C. 20402 — Stock No. 004-000-000345-4.

Canadian Regulatory Information — This equipment complies with the Class B limits for radio noise emissions from digital apparatus as established by the Radio Interference Regulation of the Canadian Department of Communications.

REGISTRATION

To receive the full benefits of your Warranty, complete and mail the accompanying Registration Card. Also record the series and serial numbers of your equipment below. Refer to these numbers in any correspondence you have with Zenith Data Systems Corporation regarding this equipment.

Model _____ Serial # _____

Series _____ Date Purchased _____

Any attempt to alter or modify the design, or to use this device in a manner other than described in this manual, will void the Warranty and release the manufacturer from any responsibility for its operation.

Desktop Personal Computer

Owner's Manual

Z-286

595-3812-02

ZENITH data systems

THE QUALITY GOES IN BEFORE THE NAME GOES ON

Safety

Every Zenith Data Systems product is manufactured and tested with your safety in mind. However, improper use, installation, unusual stress caused by dropping or mishandling, exposure to flood, fire, rain, or excessive moisture, or accidental spilling of liquids into the computer can result in potential electrical shock or fire hazards. If this happens, have your system checked by a qualified service technician before using it again. Heed all cautions and warnings in this manual.

LIMITED RIGHTS LEGEND

Contractor is Zenith Data Systems Corporation of St. Joseph, Michigan 49085. The entire document is subject to Limited Rights data provisions.

Trademarks and Copyrights

Microsoft® MS-DOS® is a registered trademark of Microsoft Corporation.

Copyright 1987 by Zenith Data Systems Corporation.
Printed in the United States of America.

Zenith Data Systems Corporation
St. Joseph, Michigan 49085

Contents

About This Manual ix

Chapter 1 Getting Started 1-1

Before You Start 1-1
Unpacking and Setting Up 1-2
Connecting the Equipment 1-4
Up and Running 1-7
- Turning on the Power 1-8
- Self-Testing 1-9
- Entering the Monitor Program 1-10
- Setting the Clock and Calendar 1-12
- Loading a Disk 1-15

Resetting Your Computer 1-16
Booting Manually and Autobooting 1-17
- Booting Manually 1-17
- Autobooting 1-18

The Operating System 1-18
- Purpose 1-19
- Features and Functions 1-19

Chapter 2 Using Your Computer 2-1

Keyboard 2-1
- Auto-Repeat Feature 2-3
- Audible Feedback 2-3
- Alphanumeric Keys 2-4
- Numeric Keypad 2-8
- Control Keypad 2-9
- Cursor Control Keypad 2-11
- Function Keys 2-12

Disk Drives 2-13
- Drive Identification 2-13
- Floppy Disk Drives 2-14
  - Floppy Disk Drive Features 2-14
  - Floppy Disk Drive Care 2-16

Hard Disk Drives 2-16
Hard Disk Drive Care 2-17
Disks 2-18
Floppy Disks 2-18
Hard Disks 2-20
Shipping Zones 2-20
Disk Backups 2-21
Write-Protecting Disks 2-21
Formatting Disks 2-21
Organizing Data 2-22
Labeling Disks 2-23
Monitoring Disk Space 2-23
Floppy Disk Care 2-23
Hard Disk Care 2-24

Chapter 3 The Monitor Program 3-1

The Monitor Prompt 3-2
Monitor Commands 3-3
Boot Command 3-4
Booting from Floppy Disk Drives 3-4
Booting from Hard Disk Drives 3-5
Z-200 Hardware Setup/Configuration Program 3-6
Time, Date, and DST 3-8
Base Memory Size 3-8
Expansion Memory 3-9
Floppy Drive 0 and Floppy Drive 1 3-9
Boot Drive 3-10
Video Display 3-10
Video Refresh Rate 3-11
Hard Disk Drive 0 and Hard Disk Drive 1 3-11
Video and Scroll Mode Command 3-12
Color Bar Command 3-15
User-Selectable Tests 3-15
Assembly Language Debugger Commands 3-16

Chapter 4 Understanding Your Computer Hardware 4-1

System Overview 4-2
Hardware Programming Jumpers 4-3
Power Supply 4-3
Backplane Board 4-5
Keyboard Connector 4-6
CPU/Memory Card 4-6
Microprocessor 4-7
Coprocessor 4-8
Read-Only Memory (ROM) 4-8
Read/Write Memory 4-8
Hardware Programming Jumper Blocks 4-9
Input/Output Card 4-10
Parallel and Serial Ports 4-10
Parallel Connector 4-10
Serial Connector 4-12
Clock and Calendar 4-12
Direct Memory Access (DMA) 4-13
Hardware Programming Jumper Blocks 4-13
Disk Drive Controller Card 4-15
Disk Drive Chassis 4-15
Video Controller Card 4-16
Hardware Programming Jumper Blocks 4-20
Optional Memory Expansion Cards 4-21
Hardware Programming Jumper Blocks 4-22
Specifications 4-22

Chapter 5 Adding to Your Computer 5-1

Preparation 5-1
Removing the Cover 5-2
Installing a Circuit Card 5-4
Installing an Integrated Circuit 5-7

Chapter 6 Maintenance and Servicing 6-1

Checklist of Common Problems 6-2
Power-Up Tests and Messages 6-4

Contents

Testing from the Keyboard 6-9
Disk Read Test 6-11
Keyboard Test 6-11
Base Memory Test and Expansion Memory Tests 6-12
Power-Up Test 6-12
Cleaning and Maintenance 6-13
Cleaning 6-13
Replacing Your Backup Battery 6-13
Service Support 6-17

Glossary G-1

Index I-1

Figures

1-2. Typical Computer System Setup 1-2
1-2. The Back Panel of Your Computer 1-3
1-3. Connecting Your Video Monitor and Power Cord 1-5
1-4. Connecting Your Keyboard 1-5
1-5. Adjusting the Keyboard Legs 1-6
1-6. Removing the Shipping Insert 1-7
1-7. Powering Up the Computer System 1-8
1-8. Entering the Monitor Program 1-11
1-9. Setup/Configuration Program Screen 1-12
1-10. The Cursor Control Keys 1-14
1-11. Inserting a Disk 1-15

2-1. Keyboard and Compatibility Switch 2-1
2-2. Keyboard Arrangement 2-2
2-3. Alphanumeric Keyboard 2-4
2-4. Numeric Keypad 2-8
2-5. Control Keypad 2-9
2-6. Cursor Control Keypad 2-11
2-7. Function Keys 2-12
2-8. Common Disk Drive Identification 2-13
2-9. Disk Drive Features 2-15
2-10. A Typical Floppy Disk 2-19
2-11. Inside a Typical Hard Disk Drive 2-20

Contents

3-1. Monitor Command Summary 3-4

4-1. Under the Cover 4-2
4-2. Hardware Programming Jumper Blocks 4-3
4-3. Power Supply 4-4
4-4. The Backplane Board 4-5
4-5. The Keyboard Connector 4-6
4-6. CPU/Memory Card 4-7
4-7. Input/Output Card 4-10
4-8. The Parallel Connector 4-11
4-9. The Serial Connector 4-12
4-10. Disk Drive Chassis 4-16
4-11. Typical DIP Switches 4-17
4-12. The 9-Pin Video Connector 4-19
4-13. The 15-Pin Video Connector 4-19
4-14. The Video Controller Card 4-20
4-15. Memory Expansion Cards 4-21

5-1. Removing the Cover 5-3
5-2. Inside Your Computer 5-4
5-3. Installing a Circuit Card 5-7
5-4. Aligning IC Pins 5-8
5-5. Installing an IC 5-9

6-1. Input/Output Card LEDs 6-5
6-2. Locating the Backup Battery 6-15

Tables

3-1. Hard Disk Drive Types 3-12
3-2. Monitor Program Video Modes 3-13
3-3. Assembly Language Debugger Commands 3-16

4-1. Input/Output Card Jumper Block Identification 4-13
4-2. Video Controller Card Configuration 4-18
4-3. Video Connector Pinout 4-18

5-1. Card Slot Assignments 5-5
5-2. Optional IC Locations 5-9

About This Manual

This Owner's Manual has been prepared for you, the new computer owner. The Owner's Manual also tells you how to set up and start using your computer. In addition, it includes information about the features and operation of your computer so that you can customize it for your needs. This manual includes:

Chapter 1

Getting Started
This chapter tells you how to set up and connect the various components of your system and then get it running.

Chapter 2 **Using Your Computer**
This chapter describes the feature and operation of your computer keyboard, disk drives and floppy and hard disks.

Chapter 3 **The Monitor Program**
This chapter discusses the computer's resident Monitor program and how it functions in your computer.

Chapter 4 **Understanding Your Computer Hardware**
This chapter describes the hardware that is inside your computer and explains how it works. Also included is a list of the operating specifications.

Chapter 5 **Adding to Your Computer**
This chapter provides disassembly, installation, and reassembly procedures used when you upgrade your computer or add accessory cards to enhance and customize its performance.

Chapter 6 **Maintenance and Servicing**
This chapter explains the built-in tests and messages that can help you identify malfunctions in your computer. The end of the chapter tells you what to do if you need service support.

Glossary Commonly-used computer terms are defined in the glossary.

Index A subject matter and key word index is included at the back of this manual.

Chapter 1

Getting Started

You are undoubtedly anxious to unpack, set up and start using your new computer. This chapter tells you how to do that. Be sure to review the information and follow the steps outlined in this chapter. Getting started will be much easier if you follow the directions!

Before You Start

Here are some things you should know before you unpack and set up your computer.

- When you unpack your computer, keyboard, monitor and other equipment, save the cartons. You will need them to repack the computer if you ship or return it.
- Be sure to read and save the printed shipping material packed with your computer. It contains valuable information.
- Be sure you have a sturdy work surface for your computer system. Your system is easiest to use if all the equipment is located in the same area. A typical computer system setup is shown in Figure 1-1.
- Choose a location for your system that is away from heat sources such as radiators and heaters. The room temperature should be between 60° and 85° F (16° to 30° C). The relative humidity should be between 10% and 80%.
- Be sure there is unobstructed space around the equipment. This allows air circulation and prevents your equipment from overheating.
- Avoid locations where lights or windows will cause reflections on the video monitor screen.

- Be sure you use a properly rated and easily accessible power source for your computer. A switched power strip or multiple outlet box makes it easy to turn on or off all the equipment at the same time. If you have any questions concerning your power source rating, contact your service representative.

- Do not turn on power to your computer or open or close the disk drive doors until you are instructed to do so.

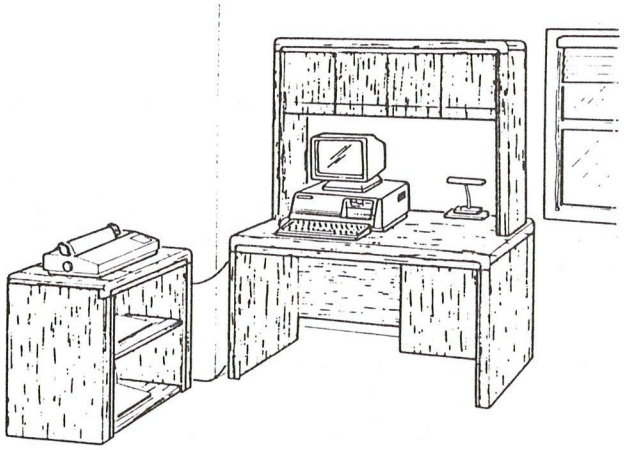

Figure 1-1. Typical Computer System Setup

Unpacking and Setting Up

1. Your operating system documentation and disks are packed on top of the computer. Unpack them and set them aside until they are called for later.

2. Carefully unpack your computer and place it on the work surface.

   CAUTION: All computers should be handled carefully to prevent damage, but be especially careful not to drop or jar a computer with a hard disk drive installed. The hard disk drive is extremely fragile and can be easily damaged.

Position your computer so you can see and access the back panel to check the switches and connect accessories. Also, note the ventilation slots on the right and left sides of the computer. They are used by the fan in the power supply for essential air movement through the computer while it is operating. Do not block these openings. Figure 1-2 shows the back panel of your computer and the ventilation slots.

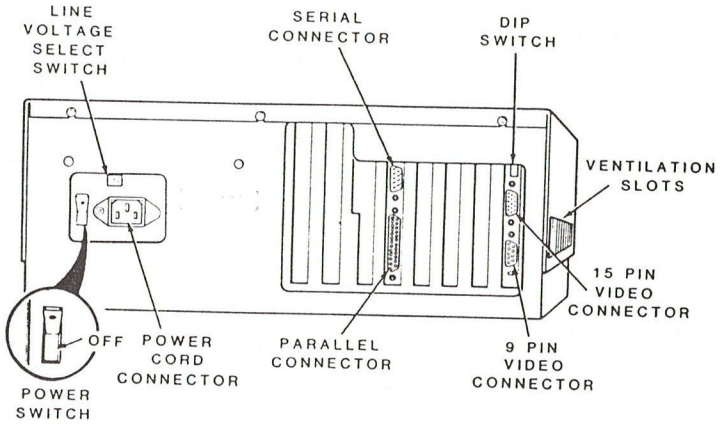

Figure 1-2. The Back Panel of Your Computer

3. Your keyboard and the power cord for the computer are packed under the computer. Unpack and set them aside until you are instructed to connect them.

4. Check the switches on the back panel to make sure that:

   - The power switch is in the OFF position. The white dot indicates the ON position.

   - The line voltage select switch is set correctly for your power source. This switch selects either 115 VAC or 230 VAC line voltage. The computer is factory-set for 115 VAC, the standard voltage in the United States. This switch should never be changed unless you are in an area service by a 230 VAC power source. If you are uncertain about the voltage of your power source, check with your local power company.

Connecting the Equipment

1. Carefully unpack your video monitor and place it where you normally will use it. You may place the monitor on top of the computer if it is convenient for you. Make sure you have access to all of the controls and connectors. Make sure the monitor power switch is off.

   CAUTION: Your computer is factory-set to operate with either a high-resolution analog (31 KHz) video monitor or a multisync video monitor. If you wish to use an EGA, CGA, or TTL-compatible monochrome video monitor, you must change the setting of the DIP switch and the hardware programming jumpers on the video controller card. Chapter 4 contains specific instructions for resetting the video controller card. To prevent damage to your video monitor, contact your service representative if you have any questions about the video monitor you intend to install.

2. Refer to Figure 1-3. If you have an analog video monitor, connect the video cable from the back of the monitor to the 15-pin video connector on the back panel of the computer. If you have a multisync video monitor, connect the video cable to the 9-pin video connector on the back panel. Secure the connection by tightening the screws on the connector.

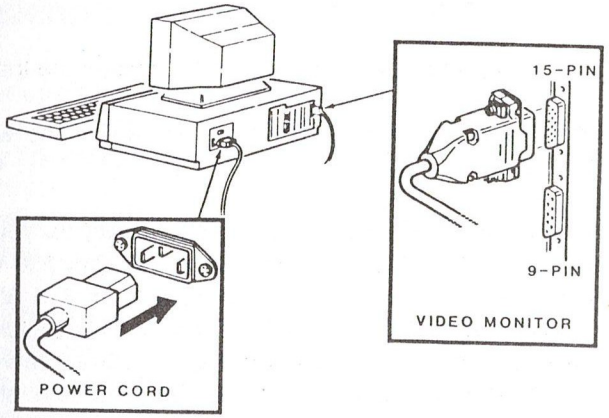

Figure 1-3. Connecting Your Video Monitor and Power Cord

3. Locate the computer power cord and plug the appropriate end of the cord into the power cord connector on the back panel of the computer.

4. If you want to connect any peripherals (such as a printer or modem) to your computer, refer to Chapter 5 for connection information and connect them to your computer now.

5. Position the computer so that the front is facing you and you can easily reach the disk drive(s) to insert and remove floppy disks. You should be able to reach the power switch on the back panel and the keyboard connector on the left side of the computer should be accessible. Figure 1-4 shows the location of the keyboard connector.

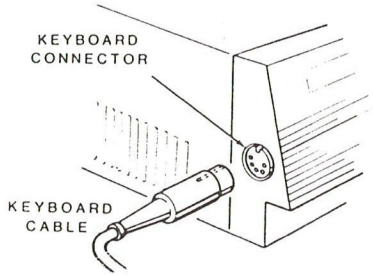

Figure 1-4. Connecting Your Keyboard

6. Place the keyboard where you intend to use it and connect the keyboard cable to the keyboard connector as shown in Figure 1-4. The keyboard receives its power directly from the computer and does not have a separate power connection.

You can adjust the tilt of your keyboard to the most convenient angle for your use. Simply move the legs on the bottom of the keyboard, as shown in Figure 1-5.

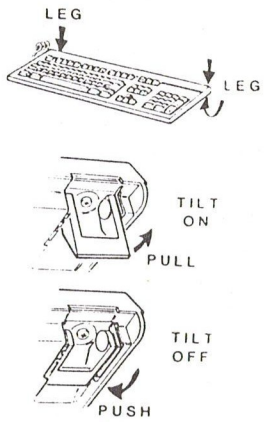

Figure 1-5. Adjusting the Keyboard Legs

7. Plug the computer and monitor power cords into an AC power source.

   CAUTION: If you use a switched power strip or multiple outlet box for all your components, be sure it is properly rated for your systems power needs:

   - For 115 volt systems, a minimum power rating of 10 amperes is needed.
   - For 230 volt systems, a minimum power rating of 5 amperes is needed.

   Do not use an extension cord unless it is a heavy-duty, three-wire type. Smaller cords can pose a safety hazard and tend to reduce the amount of voltage available, causing performance problems with your computer.

8. Be sure the power switches are in the OFF position and plug any peripherals into an AC power source.

9. Refer to Figure 1-6 and open the drive latch(es) on the floppy disk drive(s), and then remove the cardboard shipping insert(s). Save the inserts. If you want to ship the computer in the future, insert them in the disk drive slot to prevent damage to the disk drive.

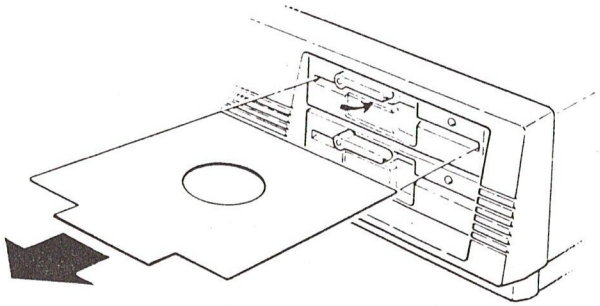

Figure 1-6. Removing the Shipping Insert

Up and Running

After you have unpacked, set up, and connected all of your computer equipment, you are ready to get your system powered up and running. This part of Chapter 1 describes:

- The power-up procedure
- Your computer's brief self-tests
- What you will see and hear when you first power-up
- How to set your computers built-in calendar and clock
- How to load the first floppy disk into your computer.

Some parts of the following procedure may vary slightly, depending on whether your system contains one or two floppy disk drives or a floppy disk drive and a hard disk drive. The procedures that are specific to floppy disk drive systems or hard disk drive systems are clearly identified. You only need to perform those procedures that apply to your system.

Turning on the Power

Turn on the power to your computer system using either of the sequences illustrated in Figure 1-7.

CAUTION: Never power-up your computer with a floppy disk inserted in the disk drive. A power surge could ruin the disk.

For individual operation, turn on power to the video monitor first, then the computer. Figure 1-7 shows the computer power switch in the ON position. Turn on power to any peripherals last.

If your computer system is connected to a switched power strip or multiple outlet box, the single switch controls power to the entire system simultaneously.

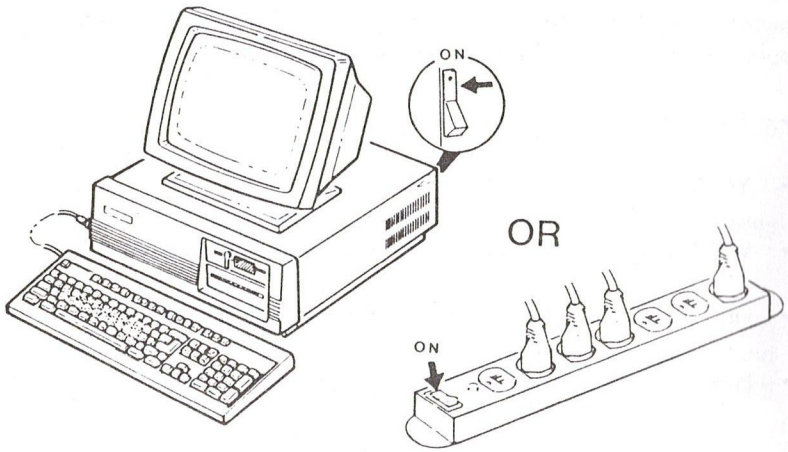

Figure 1-7. Powering Up the Computer System

Self-Testing

Each time your computer is turned on, it automatically performs a series of internal self-tests that check the major circuits and verify that various functions operate properly. If some part of the computer fails to operate correctly, the computer attempts to display an error message on your video monitor. Chapter 6 contains more detailed information on these self-tests and error messages.

In addition to the self-tests, the following events occur when power is turned on:

- A green Light Emitting Diode (LED) on the front panel glows.
- A small cooling fan starts up.
- The LED(s) on the floppy disk drive(s) and hard disk drive light alternately.
- The drives make some sounds as their read/write heads move back and forth.
- The computer beeps as it initializes the drives.
- A blinking cursor appears on the video monitor screen.
- After about 20 seconds, the computer starts the "autoboot" procedure. Autoboot is the automatic loading of an operating system from the floppy disk drive or the hard disk drive into the computer's memory. (The end of this chapter includes more details about autoboot.)

If you have only floppy disk drives, one of the drive LEDs will light and remain on. Since there is no floppy disk in the disk drive, the following error message will appear on your video monitor screen.

```
+++ DISK ERROR:  Drive not ready! +++
```

This message is normal. It indicates that the computer is operating properly and has detected that there is no floppy disk in the floppy disk drive. If you see any other error messages, refer to Chapter 6 for more information.

If you have a hard disk drive, the LED on the hard disk drive will light and remain on. Since the operating system has not been installed on the hard disk yet, the following error message will appear on the screen:

```
Not a bootable partition
```

This message is normal. It indicates that the computer is operating properly and has detected that the hard disk has no operating system installed. If you see any other error messages, refer to Chapter 6 for more information.

With a message showing on the video monitor, take a minute to adjust the screen display for the best contrast and brightness according to the video monitor's documentation.

Since you will not be using the autoboot feature at this time, enter the Monitor Program.

Entering the Monitor Program

The Monitor program is a special program permanently built into your computer. For more information about it, refer to Chapter 3. You will be using a routine in the Monitor program to set your clock and calendar.

To enter the Monitor program press the CTRL (control), ALT (alternate) and INS (insert) keys in sequence, hold them down briefly, and then release them. The following message will be displayed on your video monitor:

```
MFM-200 Monitor, Version x.xx
Memory Size: xxxK
Enter "?" for help.
->_
```


Your computer will display numbers in place of the x's shown. This message and the Monitor prompt (->) lets you know that you have entered the Monitor program and that it is waiting for a command.

If for some reason the Monitor prompt does not appear on your screen, press the CTRL (control), ALT (alternate) and ENTER keys in sequence, hold them down briefly, and then release them. After entering the Monitor program using this key combination, a message similar to the following will be displayed on your video monitor:

```
AX=0A9F BX=0324 CX=0607 DX=0D02 SI=6705 DI=0000 BP=03C6 SP=03C6
CS=0070 DS=0040 SS=0A9F ES=0A9F IP=0D23 FL= NC PE NA ZR PL DI UP NV
0070:0D23  8BEC          MOV    BP,SP
->
```

This message contains information about your computer that is used by programmers. The important thing to look for is the Monitor prompt (->). When this appears, you have reached the Monitor program and it is waiting for a command.

Figure 1-8 shows the location of the different keys used to enter the Monitor program.

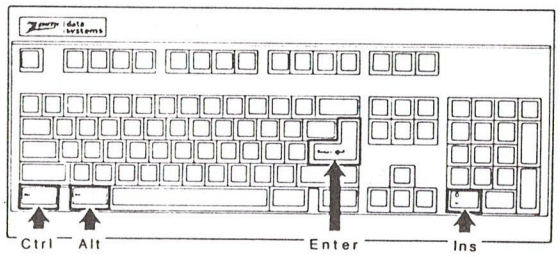

Figure 1-8. Entering the Monitor Program

Setting the Clock and Calendar

Your computer has a built-in clock and calendar. It keeps track of the time and date even when the computer is turned off. To keep accurate time, you must set the clock and calendar when you turn the computer on for the first time or whenever you replace the back-up battery. To set the calendar and clock:

1. Type the word SETUP and press the ENTER key. This command allows you to enter the Z-200 Hardware Setup/Configuration Program and set your computer's clock and calendar. Figure 1-9 shows a typical Setup/Configuration Program screen display.

```
Z-200 Hardware Setup/Configuration Program

Time:   00:00:00   DST:  Enabled
Date:   01/01/1987         Disabled

Base Memory Size:          512K bytes
Expansion Memory:           0K bytes

Floppy Drive 0:      5-1/4" 1.2M
Floppy Drive 1:      - Not Present -

Boot Drive:          Floppy Drive 0
                     Hard Disk Drive 0
                     Floppy then Hard Disk
                     Enter MFM-200 Monitor

Video Display:       Color Card: 40X25
                     Color Card: 80X25
                     Mono. Card: 80X25
                     Enhanced Graphics
Video Refresh Rate:  50 Hz  60 Hz

Hard Disk Drive 0:   -Not Present-
   Media Type: N/A
   Cylinders:        Heads:
   Ship Zone:        Sectors:
   Precomp:          Capacity:

Hard Disk Drive 1:   -Not Present-
   Media Type: N/A
   Cylinders:        Heads:
   Ship Zone:        Sectors:
   Precomp:          Capacity:

Enter Current Time As HH:MM:SS In 24 Hour Format
Use Space/Backspace to select values, Arrows to move, Esc when done
```

Figure 1-9. Setup/Configuration Program Screen

The display is divided into sections (called fields) that contain information about the hardware installed in your computer. Check to make sure that these match the hardware actually installed in your system. If you have any questions or notice that something does not match, refer to Chapter 3 for instructions for updating the information stored by the Setup/Configuration program. If you still have questions, contact your service representative.

2. The Time field is highlighted in the upper left corner of the screen and the blinking cursor is located under the first number immediately to the right of the word Time.

   Your computer keeps track of time using a twenty-four hour clock, in hours (00 - 24), minutes (00 - 59), and seconds (00 - 59). Type in the time of day using this format, then press the ENTER key. For example, to enter 8:35 am, type 083500; to enter 8:35 pm, type 203500. The computer automatically adds the semicolons (:) to separate the hours from the minutes and seconds.

   If you make a mistake while typing, use the BACKSPACE key to erase the incorrect entry, type it again, and then press the ENTER key.

3. The highlight has now moved to the Date field and the blinking cursor is now located under the first number to the right of the word Date.

   Your computer keeps track of the date using months (01 - 12), days (01 - 31) and years. Type in the date using this format, then press the ENTER key. For example, to set the calendar for January 5, 1987, type 01051987. The computer automatically adds the slashes (/) to separate the month from the day and year.

   Again, if you make a mistake while typing, use the BACKSPACE key to erase the incorrect entry, type it again, and then press the ENTER key.

4. Your computer is factory-set to automatically adjust the clock for Daylight Savings Time. You can disable this feature by using the cursor control (arrow) keys to move the highlight to the DST (Daylight Savings Time) field. Figure 1-10 shows the location of the cursor control keys.

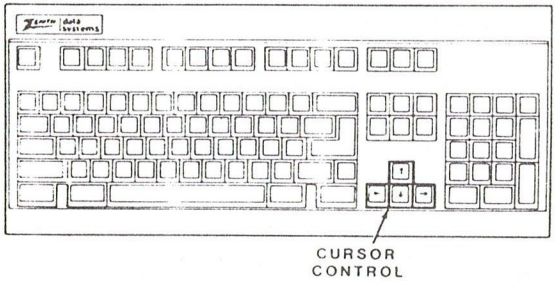

Figure 1-10. The Cursor Control Keys

Notice that the word Enabled is highlighted. Press the Space Bar to move the highlight to the word Disabled.

If in the future you want to enable the daylight savings time feature again, press the BACKSPACE key to move the highlight back to the word Enabled.

5. When you are finished setting the calendar and clock, press the ESC key. The following message will appear at the bottom of the screen:

```
Are You Done Making Changes (Y/N)?
```

6. Press the Y key to let the computer know that you are finished setting the calendar and clock. The message at the bottom of the screen will change to read:

```
Press Return to save changes or Esc to ignore changes.
```

7. Press the ENTER key to let the computer know that you want it to use the clock and calendar information you entered.

8. Your computer will attempt to autoboot. Use the CTRL-ALT-INS key combination to return to the Monitor program.

Loading a Disk

Locate the operating system material shipped with your computer. The package contains one or more bootable floppy disks with the operating system on them. If you do not know which disk contains the operating system and the operating system's Setup program, consult the operating system documentation.

1. Insert the operating system disk into the top floppy disk drive (drive A), as shown in Figure 1-11. Be sure the disk is oriented properly, and close the disk drive latch.

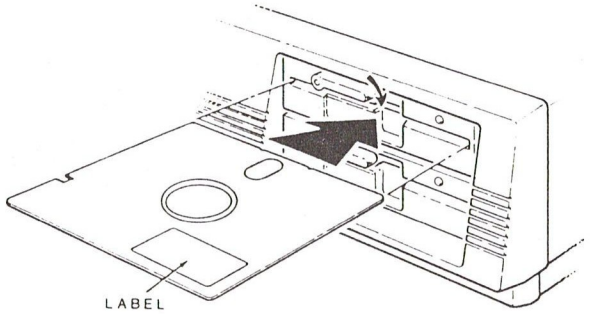

Figure 1-11. Inserting a Disk

2. You are now ready to boot your computer. Press the B key, the F key and then the ENTER key. This command means "Boot from the Floppy drive" . Pressing the ENTER key tells the computer to carry out the command.

During the boot process, the top floppy disk drive's LED lights, indicating that the disk is being read by the computer. You will also hear a buzzing sound from your floppy drive. This is the normal sound of the disk drive motors.

When the opening message appears on the screen, the booting process is complete. You have just loaded the operating system from the floppy disk into your computer's memory. The booting process is also called bootup.

3. Read the messages displayed on your video monitor and reply to the requests for information that appear until the operating system prompt appears on the screen. If you make a mistake when typing a response, simply backspace over the mistake and retype your entry. Consult your operating system's documentation if you do not know what the operating system prompt looks like.

The messages displayed on your video monitor after you bootup the operating system may vary, depending on the disk operating system you have. The operating system's setup program guides you through the beginning steps of making copies of your operating system disks, setting up your computer, and preparing your floppy and hard disks so that you are ready to use application software packages.

If you encounter any problems in loading the correct floppy disk or using the operating system's setup program, refer to your operating system documentation. It describes the setup program in detail and includes procedures for correcting problems.

Resetting Your Computer

To verify that the operating system's setup program was executed properly, the computer should be taken through the autoboot process. Again, autoboot is the automatic loading of an operating system from a disk drive into the computer's memory. This section describes how to reset your computer and cause it to autoboot without turning the system off.

1. **If you have only floppy disk drives,** make sure your working copy of the operating system disk is in Drive A (the top floppy disk drive) and the disk drive door is closed.

If your system has a hard disk drive, make sure there is no disk in your floppy disk drive and the disk drive door is open.

2. Press the CTRL, ALT, and DEL keys in sequence, holding them down, and then release them. This key combination resets your computer and causes it to autoboot.

   Your computer is factory-set to autoboot from either the top floppy disk drive or the hard disk drive. After 20 or 30 seconds you should see the operating system's opening messages and prompt appear on the screen. If this does not happen, check your operating system documentation and make sure that you completed all of the procedures in the operating system setup program.

Booting Manually and Autobooting

As you become more familiar with your computer system, you will want to take advantage of the autoboot feature. At other times, you may want to disable autoboot and boot a disk manually.

Booting Manually

Depending on the type of drives installed in your system, there are several ways for you to disable the autoboot feature.

1. With no floppy disk in the drive and no operating system installed on the hard disk drive, turn the computer on (or reset it using the CTRL-ALT-DEL key combination), and wait until the autoboot process is completed. This will take about 20 seconds in computers that autoboot from a floppy disk and about 35 seconds in computers that autoboot from the hard disk. When an error message appears on the video monitor, press the ESC key.

2. Enter the Monitor program by pressing the CTRL-ALT-INS key combination.

3. Change the boot drive information stored in the computer's memory by the Setup/Configuration program. Refer to Chapter 3 to do this.

Autobooting

Depending on the type of drives installed in your system, there are several ways to enable your computer to autoboot.

If you have only floppy disk drives:

1. Insert a bootable disk in the top drive within 20 seconds of turning on power to the computer. Remember that a bootable disk has the operating system on it.

2. With a bootable disk installed in the boot drive, reset the computer using the CTRL-ALT-DEL key combination.

3. Change the boot drive information stored in the computer's memory by the Setup/Configuration program. Refer to Chapter 3 to do this.

If you have a hard disk drive, your computer is factory-set to autoboot from the hard disk. If you have loaded the operating system onto the hard disk and have not changed the boot drive information stored in the computer's memory by the Setup/Configuration program, your computer will autoboot each time you turn the power on or reset the computer. Refer to your operating system's documentation to load the operating system onto the hard disk and to Chapter 3 of this manual to use the Setup/Configuration program.

The Operating System

The operating system serves as the link to your application programs or other software that allows your computer to perform tasks. Put simply, the operating system is a program your computer uses to run other programs.

Your operating system documentation provides you with complete information about the operating system and how to use it. The discussion of the operating system here describes its purpose in your computer system and some common features and functions.

Purpose

The operating system is supplied on floppy disks which must be loaded into computer memory. That is why it is sometimes called a disk operating system or DOS. Once the Monitor program's boot command has transferred DOS into computer memory, the operating system has a two-fold job:

- It ties all of the hardware components of your computer (such as the keyboard, video display, disk drives, and printer) together as a functioning system and controls their interaction and operation.

- It directs the computer in running various application programs. While an application program directs the computer to perform a particular task or function, it usually does not contain instructions required to actually control the hardware — the operating system does.

Features and Functions

To give you an idea of the variety of things the operating system does, the following describes some of the features and important functions of the operating system:

- Keeping track of the physical parts of your computer system at all times and overseeing their interaction and operation.

- Controlling the transfer of data between devices such as your keyboard, video monitor, and printer.

- Keeping track of where data is located on disks and retrieving that information when needed.

- Providing a standard set of instructions for often-used tasks so they do not need to be repeated in every applications program.

- Letting you do numerous tasks, such as prepare new disks to receive data, set up files of data, copy information from one disk to another, erase information from disks, and load other programs into the computer's memory.

The operating system has many other functions in your computer system. They are described in detail in the operating system documentation.

Chapter 2

Using Your Computer

After you have completed the procedures in Chapter 1, you should have your computer up and running. In this chapter and the remaining chapters of this manual, you can learn more about your computer system and how it works. This chapter describes:

- The keyboard and how to operate it.

- The disk drives and how to operate and care for them.

- The floppy and hard disks and how to use and care for them.

Keyboard

Your advanced keyboard can be used with both AT-compatible and XT-compatible computers by simply changing the position of a switch. When you receive your keyboard, it is set for AT-compatibility. If you should ever want to use the keyboard with an XT-compatible computer, gently lift up the nameplate. Refer to Figure 2-1 and move the switch to the XT position and replace the nameplate.

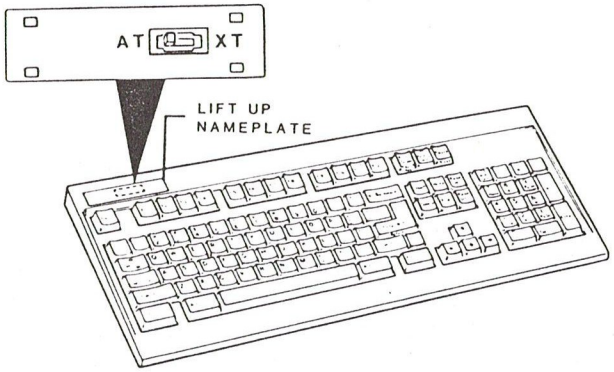

Figure 2-1. Keyboard and Compatibility Switch

The keyboard's layout makes it easy to use for all types of entries. The 101 keys on your keyboard are arranged in the following groups, as shown in Figure 2-2:

- Alphanumeric keys
- Numeric keypad
- Control keypad
- Cursor control keypad
- Function keys.

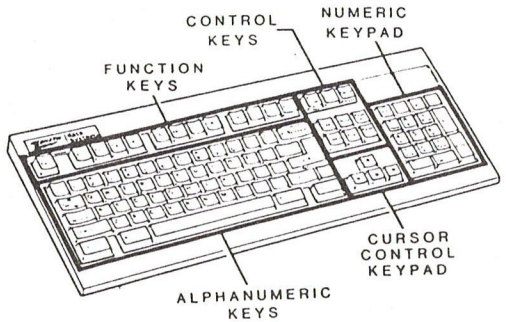

Figure 2-2. Keyboard Arrangement

Some of the key groups contain familiar keys, like those found on a typewriter keyboard or a calculator keypad. Others contain unique keys. Some familiar keys have learned some new tricks; your computer and your software can program them with special features. The unique keys and special features of familiar keys are described in this section.

Auto-Repeat Feature

Almost every key on the keyboard auto-repeats. This means that the key repeats itself as long as you hold it down. The longer you hold an auto-repeat key down, the faster it repeats itself. This feature is most useful with keys that move the cursor, like the DEL (delete) key, the ENTER/RETURN key, the space bar, and the arrow keys. The only keys that do not have the auto-repeat feature are: SHIFT, CTRL (control), ALT (alternate), CAPS LOCK, SCROLL LOCK, and NUM LOCK (number lock).

Audible Feedback

All keys, except the SHIFT, CTRL (control), and ALT (alternate) keys, have audible feedback. Audible feedback is the clicking sound made each time a key is pressed. It can be turned off (or back on) by pressing and holding the ALT key, then pressing the tilde (~) key, and then releasing both keys.

Alphanumeric Keys

Many of the alphanumeric keys are the same as on a typewriter keyboard. The letter, number, punctuation mark, and symbol keys are arranged like a typewriter keyboard (QWERTY) as shown in Figure 2-3. To help touch typists keep their fingers on the proper keys, the F and J keys have a raised dot.

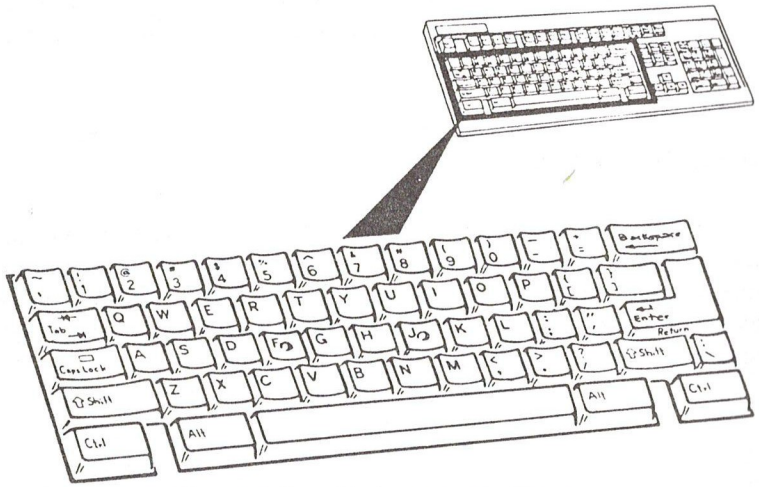

Figure 2-3. Alphanumeric Keys

Most of these keys also perform like typewriter keys. When the number, letter, punctuation mark, or symbol keys are pressed, that character appears on the screen.

Other keys (BACKSPACE, space bar, and TAB), when programmed by software, perform quite differently from typewriter keys. For example, the shift keys effect some keys, but not others.

There are also some alphanumeric keys that are unique to computers. The two modifier keys, CTRL (control) and ALT (alternate), are always used with other keys. These perform no function when used alone. The CAPS LOCK key acts like a typewriter shift lock key, and the ENTER/RETURN key acts like a typewriter carriage return key.

Two other important differences between a typewriter keyboard and your computer keyboard are:

- The computer understands the difference between the number 1 and the lower case letter l. Be sure you do not type the letter l when your mean the number 1.

- The number 0 (zero) and a capital letter O may look alike, but they have different meanings to the computer. Many computers display the number 0 with a diagonal line through it. Make sure you type the correct character.

This section describes how the unique and special feature alphanumeric keys work.

Shift — There are two SHIFT keys on the keyboard; one is located on the right side of the keyboard and one on the left. Usually, when a SHIFT key is pressed, capital letters, symbols, and alternate punctuation marks are generated. If the CAPS LOCK is engaged, pressing a SHIFT key causes the letter keys to generate lower case letters. In some software packages, the SHIFT keys are also used in combination with other keys to enter commands. Particular control functions are discussed in your software documentation.

Caps Lock — This is almost the same as a typewriter shift lock key: press it once to begin typing capital letters, press it again to stop typing capital letters. The difference is that CAPS LOCK only affects the letter keys. You still need to press either the right or left SHIFT key to change the top row of numbers into special symbols (!, @, #, etc) and to engage the alternate punctuation marks and symbols ({, :, ?, <, etc.). Also, when CAPS LOCK is engaged, the right and left SHIFT keys allow you to type lowercase letters. A light on the key is lit when CAPS LOCK is engaged.

Enter/Return — This key returns the cursor to the left side of the display. Software usually adds a line feed instruction as well. Also, pressing the ENTER/RETURN key after data or instructions have been entered tells the computer to process them.

Tab — This key moves the cursor to the next tab setting. Many software programs allow you to change the tab settings. Your software documentation will give you specific instructions on setting tabs.

Space Bar — Usually, when you press the space bar, it enters a blank character (space). The space bar is also used with some software to move the cursor around the screen or to change the text on the screen. For example, in the Setup/Configuration Program, you press the space bar to view information about different types of hard disk drives. Special uses of the space bar will be discussed in your software documentation.

Backspace — This key moves the cursor one space to the left and usually erases any characters in the cursor's path. The BACKSPACE key is also used with some software to move the cursor around the screen without erasing characters. Other application programs use the BACKSPACE key to view previous text. Special uses of the BACKSPACE key are discussed in your software documentation.

Ctrl (Control) — This key is one of the main keys for entering commands. Customarily, you press and hold the CTRL key, and then press another key. The CTRL key is often symbolized by a caret (^). For example, if you see ^K, you would press and hold the CTRL key, then press the K key ,and then release both keys. Some commonly used control key combinations are:

CTRL-S — The output on the screen pauses until you press another key.

CTRL-C — Any operating system program that is in progress is halted and either the operating system prompt or the message

```
Terminate batch job (Y/N)? _
```

appears on the screen. Entering Y terminates the program; entering N allows the program to continue execution.

CTRL-PAUSE/BREAK — Any Monitor program command that is in progress is suspended.

CTRL-ALT-DEL — The computer resets, executes the power-up self-tests, and either autoboots or enters the Monitor program.

CTRL-ALT-INS — The computer enters the Monitor program.

CTRL-ALT-ENTER — This key combination is an alternate means of entering the Monitor program. It is often used in the debugging process since it suspends most programs and displays the contents of the CPU registers on the video monitor.

Alt (Alternate) — The ALT key is similar in operation to the CTRL key. It is used with other keys to enter commands. Usually, the command entered using ALT and another key is programmed by software. Your software documentation will discuss particular uses of the ALT key.

Numeric Keypad

The numeric keypad, shown in Figure 2-4, has many of the same keys as a calculator keypad. The numbers keys are arranged like a calculator keypad. This allows numeric data to be entered rapidly if NUM LOCK is engaged or either SHIFT key is pressed. Your computer automatically sets NUM LOCK on when it powers up, enters the Monitor program, or resets.

These keys do not perform like calculator keys. They will not perform calculations, unless programmed by software. Also, when NUM LOCK is not engaged, the keys perform like cursor control (arrow) and control keys found in the cursor control keypad and control keypad.

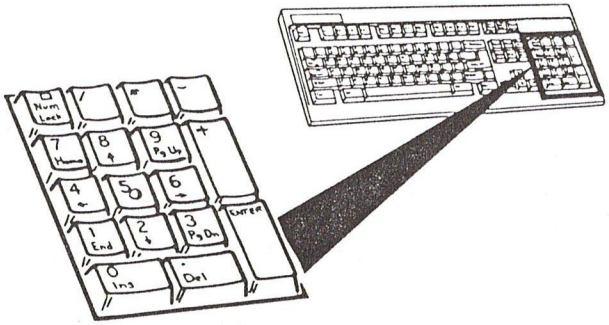

Figure 2-4. Numeric Keypad

When NUM LOCK is pressed, a small light on the key lights. This indicates that the numeric keypad is ready to be used for data entry. To turn NUM LOCK off, press the key. When the light is off, the numeric keypad can be used for control functions.

Control Keypad

The functions of the control keys are determined by software. The operating system and other software packages, such as word processors and spreadsheets, program these keys to perform particular functions. Your software documentation will provide particular information on the use of each key shown in Figure 2-5.

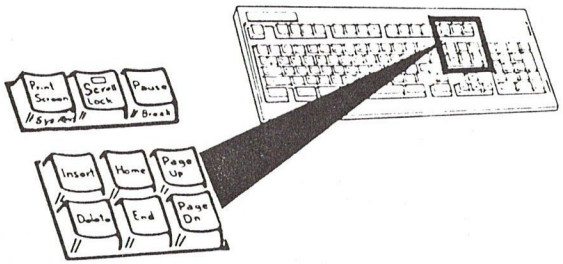

Figure 2-5. Control Keypad

A few older software programs may not allow all of the functions to be performed using the separate control keypad. If you are running such a program, it may be necessary to use the corresponding keys in the numeric keypad section of the keyboard.

Here are some examples of the operations these keys perform:

Print Screen/SysReq (System Request) — The PRINT SCREEN key sends the 25 lines of information displayed on the screen to the printer to be printed. This key is particularly useful when you run operating system commands like DIR and TYPE and want to have a paper copy of the information. If your printer is turned off, not on-line, or out of paper, the computer pauses for about 10 seconds. If the printer is still not ready at the end of this time, the computer ignores the command.

When used with the ALT key, SYS REQ performs a function similar to the BREAK key. Various software programs use it to return to the operating system. Your software documentation provides specific information on the use of this function.

Scroll Lock — When you press the SCROLL LOCK key, a small red light on the key lights. This indicates that the SCROLL LOCK feature is engaged. Press the key again to turn SCROLL LOCK off. Some spreadsheets use SCROLL LOCK to keep the cursor on the same screen line while moving the whole spreadsheet.

Pause/Break — The PAUSE/BREAK key is used to engage either one of two features — pause or break. The pause feature freezes the display of text on the screen and is engaged by pressing the PAUSE/BREAK key. For example, if you enter an MS-DOS® TYPE command, the text scrolls up the screen faster than you can read it. Pressing the Pause key will stop the display temporarily. Pause can be canceled by pressing any other key.

The break feature is engaged by pressing the CTRL key and the PAUSE/BREAK key in combination. Break is generally used with operating system commands. In some systems the Break feature halts programs as they are running. For example, if you begin a MS-DOS DISKCOPY routine, then realize that you cannot find the disk you want to copy, you can use the Break feature to return to the operating system prompt. Break is also useful for stopping TYPE commands.

Delete (Del) — When pressed at the same time as the CTRL (control) and ALT (alternate) keys, the DELETE key causes the computer to reset and attempt to load the operating system from the boot drive. Many software packages also use this key to erase individual characters, words, or whole documents. The DEL key on the numeric keypad performs the same functions.

Insert (Ins) — When pressed at the same time as the CTRL (control) and ALT (alternate) keys, the INSERT key calls up the Monitor program. Since the computer is not actually reset, you can boot an alternate drive using Monitor Commands even though the computer is set to autoboot. This key is also programmed by various software packages to allow text or commands to be inserted. The INS key on the numeric keypad performs the same functions.

Home — In many software programs, pressing the HOME key moves the key to the upper-left corner of the screen. Some word processing programs use the HOME key to move the cursor to the beginning of the current line. With spreadsheet programs, pressing the HOME key usually move the active cell indicator to the upper-left corner of the spreadsheet. The HOME key on the numeric keypad performs the same functions.

End — Pressing the END key typically moves the cursor to the lower-left corner of the screen. With some word processor programs, the END key moves the cursor to the end of the current line. Many spreadsheets use the END key to move the active cell indicator to the most remote cell. The END key on the numeric keypad performs the same functions.

Page Up (PgUp) and Page Down (PgDn) — The PAGE UP and PAGE DOWN keys move the cursor some set number of lines upward or downward. The PGUP and PGDN keys on the numeric keypad perform the same functions.

Cursor Control Keypad

These four keys are illustrated in Figure 2-6. The arrows indicate the direction in which they move the cursor. The Setup/ Configuration Program uses them to move the highlight from one field to the next. They can be used with word processing software to move the cursor for typing and positioning text. With many spreadsheets, these keys move the active cell in the direction they point.

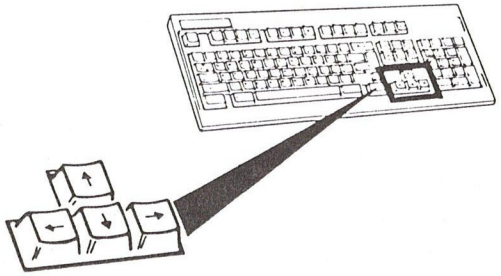

Figure 2-6. Cursor Control Keypad

A few older software programs may not allow all the functions to be performed using a separate cursor control keypad. If you are running one of these application programs, it may be necessary to use the corresponding keys in the numeric keypad section of the keyboard.

Function Keys

The thirteen function keys are located in a row above the alphanumeric keyboard, as shown in Figure 2-7. They are labeled F1 through F12 and ESC. The operation of these keys is different with each software program. In some applications, these keys have no effect on the operation of the computer.

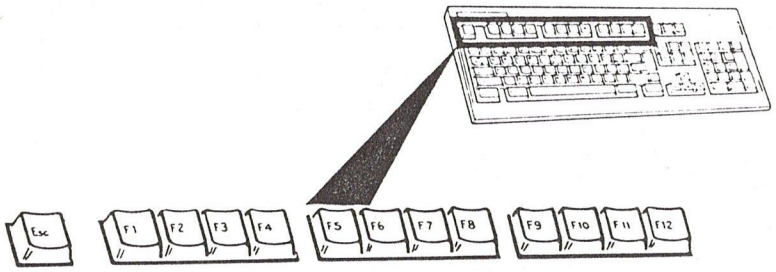

Figure 2-7. Function Keys

Esc — This is the escape key. It is commonly used to stop the execution of a program. When used with the MS-DOS Line Editor, the ESC key causes the computer to cancel the current line of input.

F1-F12 — These function keys are used for special purposes by software packages. For example, in some word processing programs, the function keys perform such functions as indenting, setting right and left margins, underlining, and boldfacing type. The function keys have special capabilities in the MS-DOS operating system. For example, the function key F1 allows you to use all or part of a previously-entered command. Your software documentation provides specific information about the use of the function keys.

Disk Drives

Computers use disk drives to transfer programs and data between memory and disks. Your system may have one floppy disk drive, two floppy disk drives, or one floppy disk drive and one hard disk drive.

Drive Identification

Floppy and hard disk drives are given names (drive A, B, C, etc.). You use the drive name to let the computer know where to look for the information you want it to work with.

Drive names are arbitrary and are usually specified by the operating system you are using. Most systems identify the disk drives on your computer as illustrated in Figure 2-8. The documentation for your operating system will provide specific information on drive names.

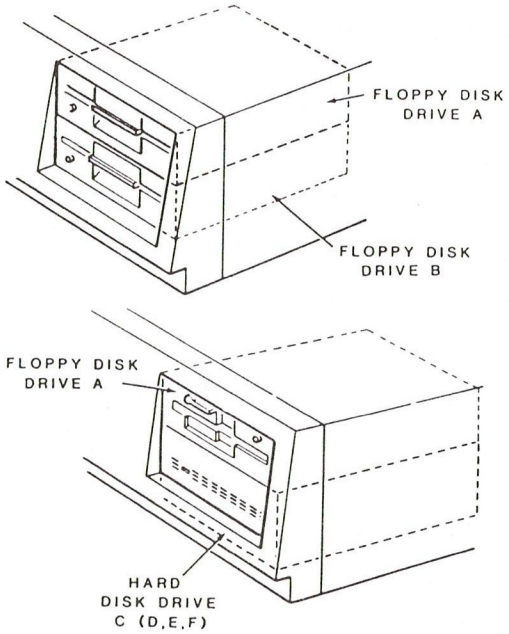

Figure 2-8. Common Disk Drive Identification

Floppy Disk Drives

Floppy disk drives transfer programs and data from floppy disks to your computer's memory and back again. This allows you to use application programs and to transfer information from one computer to another. The Monitor program and your operating system take care of most of the operation for you. All you need to do is insert the disk into the disk load slot and close the latch. The drive access indicator lights when information is being transferred.

If your computer is equipped with one floppy disk drive, it is a high-density drive that reads and writes 1.2 megabytes of information on each 5.25-inch floppy disk. If your computer is equipped with two floppy disk drives, they are double-density drives that read and write 360 kilobytes of information on each 5.25-inch floppy disk. More detailed information about using and caring for your floppy disks is included at the end of this chapter.

Floppy Disk Drive Features

Refer to Figure 2-9 while reading the following paragraphs.

Disk load slot — Insert floppy disks in this slot with the label up and toward you. If the disk is not installed correctly, the drive will not operate properly and your disk or the drive may be damaged. The disk should slide smoothly into the drive. If the disk meets any resistance, check to see if a disk is already in the drive.

Disk drive latch — Depending on your computer model, the disk drive latch on your floppy disk drive may be a door or a handle. Two typical latches are illustrated in Figure 2-9. The latch holds the floppy disk in place in the drive. When you close the handle or door, the drive hub and the read/write heads move into their operating positions.

The latch should close easily. Never try to force it closed. Also, never close the door without a disk installed. If you have difficulty, remove the disk and inspect the center hole for damage. If there is no damage, be sure your disk is oriented properly and try inserting

the disk again. If you still cannot latch the drive, contact your service center.

Drive access indicator — A small light on the floppy disk drive lights when the computer is attempting to read or write information to the disk. The read/write operation will be successful only if the disk is inserted properly and the drive latch is closed.

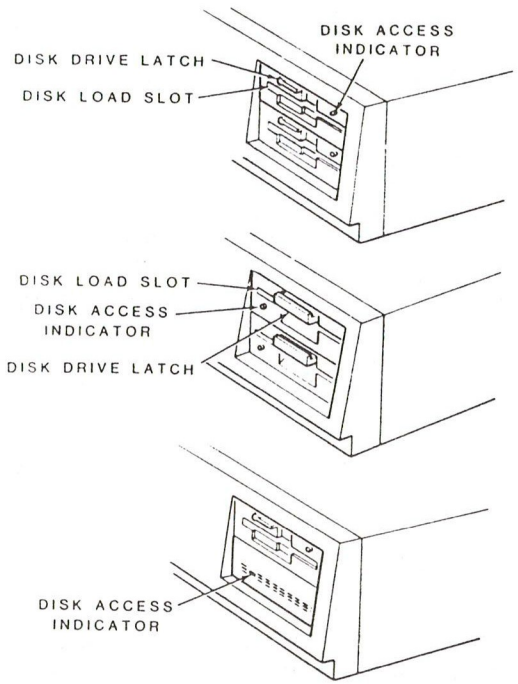

Figure 2-9. Disk Drive Features

Floppy Disk Drive Care

Floppy disk drives are extremely reliable and require no special maintenance. Here are some guidelines you should follow to assure trouble-free operation of your disk drives.

DO: Orient disks properly (label side up, label toward you) before attempting to insert them in the drive.

Insert the shipping card into the disk load slot before moving or shipping your computer. Do not close the drive latch.

Keep dust, dirt and smoke away from the drive.

DO NOT: Insert anything other than a floppy disk or a shipping card into the drive.

Insert damaged disks into the drive.

Attempt to insert more than one disk into the drive.

Close the drive latch unless a disk has been inserted into the drive.

Attempt to disassemble, clean, or adjust the drive.

Hard Disk Drives

Some computers have a hard disk drive installed in place of a second floppy disk drive. You may occasionally see these drives referred to as rigid disk drives or Winchester drives. For example, you can use the Monitor program command BW (meaning boot from the Winchester drive) to boot from the hard disk drive.

The hard disk drive operates faster than a floppy disk drive, provides a much greater amount of permanent data storage, and puts the information on-line so you have ready access to it. Some of the many advantages of having a hard disk drive in your computer are:

- An increased information storage capacity that allows you to store the equivalent of several dozen floppy disks inside your computer.

- Immediate access to the information stored in it. Because the hard disk is built into your drive, the information is always available, ready for use. Your computer can find information on a hard disk ten to twenty times faster than on floppy disks.

- The ability to customize space on a hard disk drive for particular applications. You can make efficient use of the drive's large storage space by dividing it into sections (called partitions) and store different information on each partition. The Organizing Data section of this chapter provides more information about organizing your storage space.

The Monitor program and your operating system take care of all of the operations of factory-installed hard disk drives. The drive access indicator lights when information is being transferred to and from the hard disk.

Several different hard disk drives are approved for installation in your computer. This is important only when you run the Monitor program's Setup/Configuration Program or a hard disk preparation utility from your operating system. Refer to Chapter 3 for additional information on drive types.

Hard Disk Drive Care

Your hard disk drive is designed for trouble-free operation and requires no periodic maintenance. To avoid damaging the drive, observe the following precautions.

DO: Keep dust, dirt, and smoke away from hard disk drives.

Use an operating system utility (such as MS-DOS SHIP) to park the heads in a shipping zone before you move a computer with a hard disk drive installed.

DO NOT: Jar or drop a computer with a hard disk installed.

Attempt to disassemble, clean, or repair the hard disk drive.

Disks

Floppy disks and hard disks are used for storing large amounts of information, including programs and data. The information stored on disks is only changed when the computer is instructed to write new information to the disk. Be sure that you save any changes you want to keep when working with information stored on a disk.

Floppy Disks

Systems with one 1.2M floppy disk drive, or one 1.2M floppy disk drive and one hard disk drive installed, use floppy disks that are:

5.25-inch
double-sided
double-density
high-density
soft-sectored
96-tpi.

Single-sided and standard-density 80 track and 40 track disks can also be used in 1.2M disk drives. However, once a 48-tpi disk has been written upon by a 1.2M disk drive it cannot be reliably read by a 360K disk drive. Each floppy disk provides 1.2 megabytes of storage.

If your system has two floppy disk drives installed, they are 360K drives. Use floppy disks that are:

5.25-inch
double-sided
double-density
standard-density
soft-sectored
48-tpi.

Each floppy disk provides 360 kilobytes of storage.

Single-sided disks will also work in your computer, but the magnetic oxide coating is only tested on one side of these disks. The second side of the disk may or may not be able to accurately record data.

The disk is itself is a thin, flexible plastic disk, coated with a magnetic oxide material on each side, as shown in Figure 2-10. Information is recorded on the magnetic material, much like on audio or video tape. A disk liner, a sleeve of cloth-like material, cleans the disk and traps dust particles. The disk jacket protects the disk and makes it somewhat rigid. A disk envelope further protects the exposed portions of the disk when it is not in use.

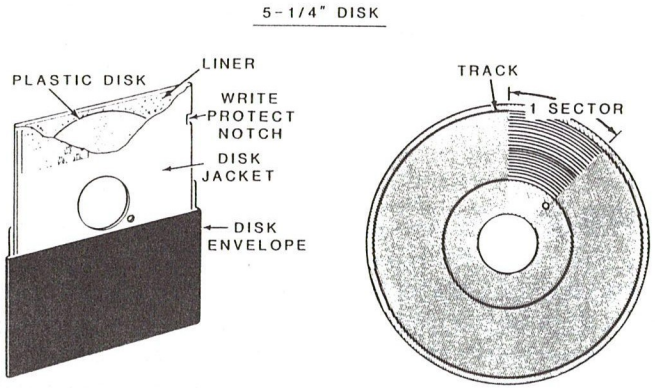

Figure 2-10. A Typical Floppy Disk

Hard Disks

Hard disks are carefully machined and polished nonmagnetic metal platters. These platters are coated with a metal oxide material similar to that used by floppy disks. They vary in size and capacity.

If your computer has a factory-installed hard disk drive, it uses two 5.25-inch or 3.5-inch platters to store 20 megabytes of information. These platters are sealed inside the hard disk drive. Other systems have different numbers of platters and different capacities. Some even have removable disks enclosed in disk packs or cartridges. Factory-installed hard disks are fixed, not removable. Figure 2-11 shows the internal components of a typical hard disk drive.

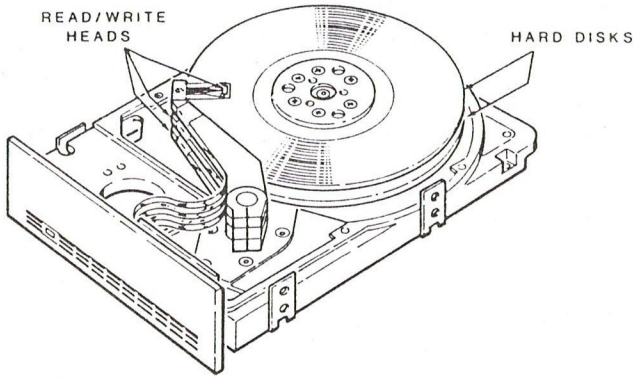

Figure 2-11. Inside a Typical Hard Disk Drive

Shipping Zones

To protect the data stored on hard disks, one or more tracks are reserved as a shipping zone. No information is stored in the shipping zone. When you run the MS-DOS utility SHIP or a similar utility program from a different operating system, the heads are moved to one of the shipping zone tracks and parked there. With the heads parked on this track, no data is lost if the heads touch the surface of the disk while the computer is being moved, shipped, or

disassembled. Run the SHIP utility before moving your computer (even across the room) and before taking the cover off.

Disk Backups

The information stored on either hard or floppy disks can be accidentally changed, distorted, or destroyed. Be sure you keep a backup copy of all valuable information stored on disks. Your operating system's documentation contains instructions for backing-up your disks.

Write-Protecting Disks

Most floppy disks have a small notch cut into the disk jacket. The notch is a "write-protect notch". It is located near the label and, when covered with a write-protect tab, prevents the computer from erasing or changing the information on the disk. Be sure your operating system master disks and application program disks are write- protected to ensure that they are not changed in any way.

Some application program master disks are supplied without a write-protect notch. This prevents the files from being accidentally destroyed. Many of these disks are also copy-protected. This means that the disks cannot be copied. It is a common method of controlling program distribution.

Formatting Disks

In order to retrieve the information stored on disks, your computer's operating system divides the disk surface into tracks and sectors. This process is called formatting. Since the disks used in your computer are soft-sectored, they must be formatted before information can be stored on them. Any disk that is not write-protected can be formatted, however, formatting a disk erases everything on it. Be sure the disk you are formatting does not contain anything valuable before you format it.

Your operating system documentation provides you with more information about the organization of data and formatting new disks.

Organizing Data

Three types of information are stored on disks:

- The operating system. You need to load the operating system into your computer before you can load and use any other information stored on a disk. The operating system is responsible for "managing" your computer so it can run application programs.

- Application programs. Word processing, spreadsheet and graphics programs which must be loaded into your computer are provided on floppy disks. These floppy disks contain all the files needed to perform the functions of the application program.

- Data. Data is the information used or generated by application programs. This is your workspace.

Many application program disks allow enough space on the disk for you to add the operating system. This combination of application program and operating system increases the efficiency and convenience of your system since the combination disk (called a working disk) is bootable.

In comparison with a floppy disk, hard disks have a very large storage capacity. To make practical use of this storage space, hard disks are often divided into partitions. You can divide your hard disk into as many as four partitions. Each partition may contain an operating system, application programs, data, or a combination of all of this information. Again , combining the information into a "working partition" increases the efficiency, convenience, and speed of your system. Dividing the disk up into partitions is a function of the operating system. Refer to that documentation for more information.

Labeling Disks

Use labels to identify the information on each disk. Floppy disks can be labeled externally, using a paper label. Write on the label with a felt-tip pen before you attach it to the disk.

You may also want to create an internal label for disks, since the external label cannot be seen once the disk is inserted in the drive. In many operating systems this internal label is called a volume label. Internal labels may be used on hard disk partitions as well as on floppy disks. Refer to your operating system's documentation for more information about internal labeling.

Monitoring Disk Space

You should always keep track of the available storage space on your disks. Otherwise, you may spend hours working on a document, only to find that there is no room to store it on The disk. A full page of single-spaced text occupies approximately 3 kilobytes (3,000 bytes) of disk space. You can use your operating system to find out what files are stored and how much available space you have on each disk. If you store your work every half hour or so, your computer will report the available disk space on your video monitor.

Floppy Disk Care

Floppy disks can be damaged by improper handling and storage. To prevent the loss of valuable information and programs, observe the following precautions when handling floppy disks:

DO: Format all new disks.

Store disks upright in their protective envelopes.

Keep disks clean and dry.

Make backup copies of valuable disks.

Put write-protect tabs on valuable disks.

Label disks with stick-on labels using a felt-tip pen.

Remove disks from drives before turning the computer off.

DO NOT: Reformat valuable disks.

Use ballpoint pens or pencils when writing on labels.

Touch the exposed surface of the disk.

Expose the disk to direct sunlight, heat, or magnetic fields of any kind.

Use paper clips or staples on disks.

Hard Disk Care

Hard disks are extremely fragile. Observe the following precautions when using a hard disk:

DO: Prepare, partition, assign, and format the hard disk before using it.

Regularly backup the information stored on hard disks.

Keep dust, dirt, and smoke away from hard disks.

Use an operating system utility (such as the MS-DOS utility SHIP) to park the heads in a shipping zone before you move a computer with a hard disk drive installed.

DO NOT: Jar or drop a computer with a hard disk installed.

Reformat or repartition a hard disk until all the information is backed up onto floppy disks.

Attempt to disassemble, clean, or repair the hard disk drive.

Chapter 3

The Monitor Program

Every computer contains a special program, called the Monitor program, that stores information vital to its operation. Multi-Function Monitor, MFM-200, is the name of the Monitor program resident in your computer. It contains:

- Power-up tests capable of detecting most problems that would prevent the computer from operating.
- The boot command which enables your computer to load the operating system from a disk into memory.
- Z-200 Hardware Setup/Configuration Program, which allows you to set the built-in clock and calendar. This program also lets you disable autoboot, select the boot drive and tell the computer what type hardware is installed.
- Video instructions which allow you to select text character size, display colors, and graphics resolution.
- The color bar command.
- User selectable tests for the disk drives, keyboard, base memory, and expansion memory.
- Commands which allow assembly language programs to be entered, changed, examined and run.

The Monitor program can help you get started and customize your computer. Since you can use this program (but not change it) and it is permanently stored in your computer's read-only memory (ROM), it is called a firmware program.

The Monitor Prompt

When you enter the Monitor program using the CTRL-ALT-INS key combination, a three-line message will appear in the upper-left corner of the screen. Under this message, you will see an arrow (->) pointing to a blinking cursor. The message and arrow (called the Monitor prompt) will be similar to the following:

```
MFM-200 Monitor, Version x.xx
Memory Size: 512K
Enter "?" for help.
->_
```

If the autoboot feature is disabled, you will see the Monitor prompt after power-up. The Monitor prompt is the computer's way of telling you that you have reached the Monitor program and it is waiting for your command.

The first line of the Monitor prompt message tells you the name and version of the Monitor program resident in your computer. The Monitor program, like other programs, is released in versions. Each time the program is updated, the revision is considered a version and given a number.

The second line of the Monitor prompt message tells you how many kilobytes (K) of memory are installed in your computer. A byte of memory is enough to store one character; a kilobyte of memory can store a thousand characters.

The third line is a reminder that, when you enter a question mark, a list of Monitor program commands will appear on the screen. The commands are typically a single letter, symbol, or word.

When you enter the Monitor program using the CTRL-ALT-ENTER key consequence, you will see a different message, similar to the following:

```
AX=0A9F BX=0324 CX=000A DX=033A SI=047A DI=01A9 BP=04C6 SP=04C6
CS=0070 DS=0040 SS=0A9F ES=0A9F IP=0D23 FL= NC PE NA ZR PL DI UP NV
0070:0D23  8BEC          MOV     BP,SP
->
```


This is information about the microprocessor. It is used by machine language programmers. The important thing is that the Monitor prompt (->) appears so you can use any of the Monitor commands. Generally, this method of entering the Monitor program is only used if the CTRL-ALT-INS key combination does not work.

Monitor Commands

Figure 3-1 shows the Monitor command summary you will see if you type a question mark (?) and press ENTER at the Monitor prompt. Use the following rules when you enter Monitor program commands:

- Items shown in brackets

  [*like this*]

  are optional entries and only need to be entered in certain cases.

- Items shown in braces and separated by a vertical bar

  {*like this* | *and this*}

  represent a series of choices. Choose only one. For example, for the items shown above you would enter either *like this* or *and this*.

- Items shown in angle braces

  <*like this*>

  should be replaced with the variable (address, mode number, etc.) you have selected.

```
                - MFM-200 Command Summary -

CMD:    Explanation            Syntax
----    -----------            ------
?:      Help                   ?
B:      Boot from disk         B [{F|W}][{0|1|2|3}][:<partition>]
C:      Color bar              C
D:      Display memory         D [<range>]
E:      Examine memory         E <addr>
F:      Fill memory            F <range>,{<byte>|"<string>"}...
G:      Execute (Go)           G [=<addr>][,<breakpoint>]...
H:      Hex math               H <number1>,<number2>
I:      Input from port        I <port>
M:      Move memory block      M <range>,<dest>
O:      Output to port         O <port>,<value>
R:      Examine Registers      R [<register>]
S:      Search memory          S <range>,{<byte>|"<string>"}...
T:      Trace program          T [<count>]
U:      Unassemble program     U [<range>]
V:      Set Video/Scroll       V [M<mode>][S<scroll>][100][200]
        Where <range> is:      <addr>{,<addr>|L<length>}
TEST:   Extended diagnostics   TEST
SETUP:  Define hardware Setup  SETUP
         Copyright (C) 1987, by Zenith Data Systems
->
```

Figure 3-1. Monitor Command Summary

Boot Command

The boot command allows your computer to boot a disk drive. The command contains routines to boot from either a floppy or a hard disk drive.

Booting from Floppy Disk Drives

To boot from floppy disk drive A, type BF (boot from floppy disk drive) and press the ENTER key. The computer will then attempt to read the operating system from the disk in Drive A. If you have a second floppy drive, you can boot it using the command BF1.

If you attempt to boot a disk that does not have the operating system installed on it, one of the following messages will appear on the screen:

```
No system

Non-System disk or disk error

+++ DISK ERROR:  Invalid address mark! +++

+++ DISK ERROR:  Sector not found! +++
```

If this happens, remove the disk from the drive, insert a system disk, and press the ESC key. When the Monitor prompt appears, re-enter the boot command. If the Monitor prompt does not appear when you press the ESC key, use the CTRL-ALT-INS key combination to enter the Monitor program.

If you attempt to boot from a floppy drive without a disk in it, this error message will appear on the screen:

```
+++ DISK ERROR: Drive not ready! +++
```

If this happens, simply enter the Monitor program again (using the ESC key), insert a system disk into the drive, and re-enter the command.

If you attempt to boot from a drive which is not installed in your computer, one of these error messages will appear on the screen:

```
+++ DISK ERROR:  Bad disk controller! +++

+++ DISK ERROR:  Drive not ready! +++
```

If this happens, press the ESC and enter the correct command when the Monitor prompt appears on the screen.

Booting from Hard Disk Drives

If your computer has a hard disk drive installed, you can boot from it by typing the command BW and then pressing the ENTER key. The W tells the computer it will be reading the operating system from a

hard disk drive using Winchester technology. If you have a second hard disk drive, use the command BW1 to boot from it.

You can also boot from a particular partition, if your hard disk has been divided into multiple partitions. Use this command, with the appropriate drive (0 through 3) and partition (1through 4) number for your system:

BW<*drive number*>:<*partition number*> ENTER

If you attempt to boot from a non-existent drive or partition, the following error message will appear on the screen:

```
+++ DISK ERROR:  Bad disk controller! +++
```

If this happens, re-enter the Monitor program by pressing the ESC key and then enter the correct command.

If you attempt to boot using a drive number that is larger than 3 or a partition number that is larger than 4 or less than 1, the following message will appear on the screen:

```
^ Invalid Command!
->
```

If this happens, simply re-enter the command, using a valid drive or partition number.

Z-200 Hardware Setup/Configuration Program

This program serves as a reference for your computer. It stores information about the hardware installed in your system. It is also used when you set your computer's clock and calendar. To enter this program, type the word SETUP after the Monitor prompt (->) and then press the ENTER key. This program allows you to change the time and hardware information.

When the Setup/Configuration Program screen appears, some of the information will be highlighted in rectangular boxes. The highlighted information should reflect the hardware currently in your computer. If it does not, change it by highlighting the correct information.

If your backup battery loses power or you remove the input/output card, the hardware information stored in your computer's memory is lost and the following message will be displayed on your video monitor:

```
+++ ERROR:  Please replace the backup battery! +++
+++ ERROR:  Bad configuration information found in CMOS! +++

---Errors found!  Please press <Esc> to continue---
```

When this happens, press the ESC key and update the hardware information to match your system. The default setting listed for each field is the information that will be highlighted on the screen. If the error message was caused by a faulty backup battery, the information you enter now will be lost again when you turn your computer off. The backup battery provides power for the computer memory that stores hardware information.

After you replace the backup battery, the information stored by the Setup/Configuration program may still be incorrect for your system. If the information stored by the Setup/Configuration program does not match the hardware configuration of your system, this message will appear on the screen:

```
+++ ERROR:  Bad configuration information found in CMOS! +++

---Errors found!  Please press <Esc> to continue---
```

When you press the ESC key, the Setup/Configuration Program will run automatically so you can make the necessary changes.

You can move up, down, right, or left between the fields of information using the arrow keys. Within each field, except the date and time fields, use the space bar and BACKSPACE key to highlight the data that matches your system's configuration.

Time, Date, and DST

Time and date are the only entries that need to be typed in. All other data is selected using the highlighted cursor. The system's clock and calendar are battery-operated and will run continuously. You only need to enter a new time and date if you replace the backup battery or a circuit board. If you type information into the Time or Date fields, use the ENTER key to move to the next field.

To the right of the Time field, is a field labeled DST (Daylight Savings Time). If you are operating your computer in an area where daylight saving time is in effect, you will want to enable this feature. The clock will automatically be set backward or forward one hour on the correct day.

The standard information highlighted in each field is known as the default configuration. The default setting for these fields are:

- Time: 00:00:00
- Date: 1/01/1987
- DST: Enabled.

Base Memory Size

The computer is shipped from the factory with 512K (kilobytes) of base memory. The base memory can be expanded to 640K. Memory beyond 640K is available with an add-on memory card and is considered expansion memory. Use the space bar or BACKSPACE key to select your computer's base memory size, positioning the highlight over 512K or 640K.

The default setting for this field is 512K of base memory.

Expansion Memory

If your computer contains more than the maximum 640K of base memory, you need to select the number of kilobytes of expansion memory you have added to the system. The selection ranges from 0K (zero kilobytes) to 15,360K, in increments of 64K. Use the space bar to increase the number, the BACKSPACE key to choose a lower number. If you do not have any expansion memory, select 0K.

The default setting for this field is 0K of expansion memory.

Floppy Drive 0 and Floppy Drive 1

Your system accommodates two floppy disk drives. The first floppy disk drive (Drive A) is referred to in the Floppy Drive 0 field, your second in the Floppy Drive 1 field. Use the arrow keys to move the highlight to the drive field and the BACKSPACE key and space bar to select any of the following drives:

5-1/4" 360K — This setting selects a 5.25-inch, 360 kilobyte, standard-density floppy disk drive.

5-1/4" 1.2M — This setting selects a 5.25-inch, 1.2 megabyte high-density floppy disk drive.

3-1/2" 720K — This setting selects a 3.5-inch, 720 kilobyte, high-density floppy disk drive.

3-1/2" 1.4M — This setting selects a 3.5-inch, 1.4 megabyte, high-density floppy disk drive.

Not Present — This setting indicates that no floppy disk drive is installed.

The default settings for these fields are:

- Floppy Drive 0: 5-1/4" 1.2M
- Floppy Drive 1: - Not Present -

Boot Drive

In this field, you select the drive your computer will attempt to boot from when it autoboots. You can select any of the following options:

Floppy Drive 0 — The computer will attempt to load the operating system from floppy disk drive A.

Hard Disk Drive 0 — The computer will attempt to load the operating system from the hard disk drive.

Floppy then Hard Disk — The computer will attempt to load the operating system from floppy disk drive A. If drive A is not ready to boot, the computer will attempt to load the operating system from the hard disk drive.

Enter MFM-200 Monitor — This selection defeats autoboot. The computer will not attempt to load the operating system from any drive, but will call up the Monitor program instead.

The default setting for this field is Floppy Drive 0.

Video Display

As shipped from the factory, your computer is equipped with a high-resolution analog video controller card that is capable of controlling analog, standard EGA, CGA, multisync, and monochrome video monitors. This field allows you to select the type of display the card will produce. You may choose from the following selections:

Color Card: 40×25 — This setting displays text at 40 characters per line, 25 lines per screen.

Color Card: 80×25 — This setting displays text at 80 characters per line, 25 lines per screen.

Mono. Card: 80×25 — This setting selects a high-resolution monochrome display.

Enhanced Graphics — This setting selects an EGA or a high-resolution analog display. Your computer is factory-set to this selection.

The default setting for this field is Color Card: 80×25.

Video Refresh Rate

Set the video refresh rate according to the power line frequency in your area. If your system is set incorrectly, the display will flicker. In the United States, the typical power line frequency is 60 Hz. In Europe, the typical power line frequency is 50 Hz.

The default setting for this field is 60 Hz.

Hard Disk Drive 0 and Hard Disk Drive 1

Your system can support a maximum of two hard disk drives. Use the arrow keys to move to the Hard Disk Drive fields, then use the BACKSPACE key and space bar to select the correct drive type or Not Present if no hard disk drive is installed.

The default settings for these fields are:

- Hard Disk Drive 0: -Not Present-
- Hard Disk Drive 1: -Not Present-

A drive type ID code can be found on the drive type label on the back of your computer. Use it along with the information from Table 3-1 to determine the correct drive type. Enter the drive type number, not the drive type ID code.

Table 3-1: Hard Disk Drive Types

DRIVE TYPE ID CODE	DRIVE TYPE	MANUFACTURER	MODEL NUMBER
263	2	Seagate Technologies	ST-225
289	33	Tandon	TM-262
1003	15	LaPine Technology Titan	3532 LT210
1008	34	Miniscribe	8425

If the drive type ID code on your computer is not listed here, contact your service representative for the correct drive type information.

Video and Scroll Mode Command

The computer display is created by turning individual dots on the screen (called pixels) on or off. Your computer does this using one of the twelve video modes and three scroll modes contained in the Monitor program. The resolution (sharpness) of the display, the number of characters per line, the number of lines per screen and the colors available are all defined in the Monitor program video modes. Scroll modes determine how information is moved onto the screen. Table 3-2. describes the video modes available. You may select any of them using the following Monitor command:

VM<*video mode*> [*scroll mode*] ENTER

Software programs may also specify particular video and/or scroll modes.

Table 3-2: Monitor Program Video Modes

MODE NUMBER	DISPLAYABLE COLORS	RESOLUTION
0 (Color)	16	40 × 25 text
1 (Color)	16	40 × 25 text
2 (Color)	16	80 × 25 text
3 (Color)[1,2]	16	80 × 25 text
4 (Color)[3]	4	40 × 25 text 320 × 200 graphics
5 (Color)[3]	4	40 × 25 text 320 × 200 graphics
6 (Color)[4]	2	80 × 25 text 640 × 200 graphics
7 (Monochrome)[5]	4	80 × 25 text 720 × 350 graphics
D (Color)[6]	16	40 × 25 text 320 × 200 graphics
E (Color)[6]	16	80 × 25 text 640 × 200 graphics
F (Monochrome)[7]	4	80 × 25 text 640 × 350 graphics
10 (Color)[8]	4 or 16	80 × 25 text 640 × 350 graphics

Table 3-2 (continued): Monitor Program Video Modes

NOTES:

1. This is the default mode.
2. To use the Plantronics capability, you must be in Mode 3. Software determines the specific Plantronics COLORPLUS mode: 320 × 200 × 16 colorgraphics, or 640 × 200 × 4 color graphics.
3. 4 colors in 2 pallets of black/cyan/magenta/white, or black/yellow/green/red, plus 16 background colors.
4. 2 colors are black and white.
5. This mode is only available with a HGC-compatible monochrome monitor. To use the Hercules capability, you must be in Mode 7. You must also use the MODE command from MS-DOS to operate in the Hercules high-resolution graphics mode. The 4 colors are black, normal, blink, and intensity.
6. 16 of 64 colors are available.
7. This mode is only available with a HGC-compatible monochrome monitor. The 4 colors are black, normal, blink, and intensity.
8. With 64K of RAM on video card, 4 of 16 colors are available. With more than 64K of RAM on video card, 16 of 64 colors are available.

Scroll modes determine how information is moved on and off the screen. The following three scroll modes are available:

S0 (Software Scroll Mode) — This mode is commonly used by PC-compatible software and works in all video modes. When material is scrolled, the display moves one line at a time. This mode is the default scroll mode for your computer.

S1 (Hardware Jump Scroll Mode) — This mode is available with video modes M3 through M6. Like scroll mode S0, the display moves one line at a time, but this mode is much faster because it is hardware controlled. This mode is not compatible with all application packages.

S2 (Smooth Scroll Mode) — This mode is available for use with video mode M6 only. When material is scrolled, the display moves a partial line at a time. This mode generates a more readable display and provides a much smoother appearance.

Color Bar Command

The Monitor ROM also contains a command which causes the screen to fill with color bars. You can use this to adjust the contrast and brightness on your monitor. On color and enhanced color monitors, 16 colors will be displayed. On some monochrome monitors, three shades (the normal display color intensified, the normal display color, and black) will be displayed. On other monochrome monitors, 16 shades will be displayed. To view the color bars, type the letter C and press the ENTER key.

User Selectable Tests

The Monitor program performs a series of self-tests to make sure the computer is ready to function each time you turn it on. If a malfunction is detected, one or more error messages are sent to the display screen to alert you of the problem. More extensive diagnostic tests are also contained in the Monitor program and may be accessed by typing the Monitor command TEST and then pressing the ENTER key. The test menu will appear on the screen:

```
CHOOSE ONE OF THE FOLLOWING:

1. DISK READ TEST
2. KEYBOARD TEST
3. BASE MEMORY TEST
4. EXPANSION MEMORY TEST
5. POWER-UP TEST
6. EXIT


ENTER YOUR CHOICE:
```

To run a test, press the number which precedes the test name on the menu. The test you have selected will then begin and will

continue running until a malfunction is discovered or you stop the test by pressing the ESC key.

Press the ESC key a second time to return to the test menu. From the menu, you may select another test or return to the Monitor prompt by selecting EXIT. Chapter 8 contains more detailed information about each of the tests contained in the Monitor program.

Assembly Language Debugger Commands

The Monitor program also contains a complete set of assembly language debugging commands. These commands allow experienced assembly level programmers to test procedures and routines, examine memory and register contents, and trouble-shoot and remove mistakes from assembler programs. Table 3-3. lists the commands available, and provides a brief description of each.

CAUTION: Do not attempt to use the assembly language debugger commands unless you are familiar with assembly level programming and microprocessor architecture.

If you want to know more about the debugging commands and how to use them, contact your service representative for information about the technical reference manual for your computer.

Table 3-3. Assembly Language Debugger Commands

COMMAND	SYNTAX	DESCRIPTION
Display memory	D<*address*>	Displays contents of 128 bytes of memory beginning at specified address.
	D<*address*> L<*bytes*>	Displays contents of specified number of bytes memory beginning at specified address.

Table 3-3 (continued). Assembly Language Debugger Commands

COMMAND	SYNTAX	DESCRIPTION
Display memory	D<*range*>	Displays contents of specified block of memory.
Examine memory	E<*address*>	Displays and allows user to alter contents of specified memory location.
Fill memory	F<*range*>,<*data byte*>	Enters specified data byte into each memory location in specified memory block.
	F<*range*>,"ASCII string"	Enters specified ASCII string into specified memory block.
Execute (Go)	G=<*address*>	Begins execution of program at specified address.
	G=<*address*>,<*breakpoint*>	Begins execution of program at specified address and halts at breakpoint.
Hex math	H<*number1*>,<*number2*>	Displays the sum and the difference of the specified hexadecimal numbers.
Input from port	I<*port address*>	Displays contents of specified port.
Move memory block	M<*range*>,<*destination*>	Copies contents of specified memory block to another specified memory block.
Output to port	O<*port address*>,<*data*>	Writes specified data to specified port address.
Examine registers	R	Displays contents of all CPU registers.

Table 3-3 (continued). Assembly Language Debugger Commands

COMMAND	SYNTAX	DESCRIPTION
Examine registers	R<*register name*>	Displays contents of Register specified CPU register and allows modification of contents.
Search memory	S<*address*>L<*bytes*>,<*data*>	Searches specified memory block for specified data byte and displays address data found.
	S<*range*>L<*bytes*>,"ASCII"	Searches specified memory block for specified ASCII character and displays address character found.
Trace program	T<count>	Executes specified number of lines of an assembled program in single-step mode.
Unassemble	U<range>	Displays assembler mnemonics and hex coding for specified memory block.

Chapter 4

Understanding Your Computer Hardware

This chapter describes the major components of your personal computer. The chapter discusses the function of the various parts of the computer and contains a complete list of the operating specifications.

Some of the features of your personal computer are:

- PC and PC-AT compatibility at 8 MHz with one wait state.
- Four expansion slots, including one PC-compatible expansion slot, one PC-AT compatible expansion slot, and two Zenith Data Systems expansion slots.
- Built-in interface connections for the keyboard, parallel and serial peripherals, and a video monitor.
- Supports one or two built-in, half-height, 5.25-inch floppy disk drives or one floppy disk drive and one hard disk drive
- 512K of base memory, expandable to 1.5M.
- Three expansion sockets, two for expansion ROMs and one for an 80287 numeric coprocessor.
- Supports virtually any user-installed video options.

The remainder of the chapter includes descriptions of how the various components of the computer work and where they are located inside the computer chassis. If you want to see any of these components, you will have to remove the cover. Refer to the Removing the Cover section of Chapter 5.

System Overview

The basic computer consists of a CPU/memory card, an input/output card, a disk drive controller card, one or more disk drives, a video controller card, a backplane board, and a power supply. Two optional memory expansion cards are also available. Figure 4-1 illustrates the location of each of these components.

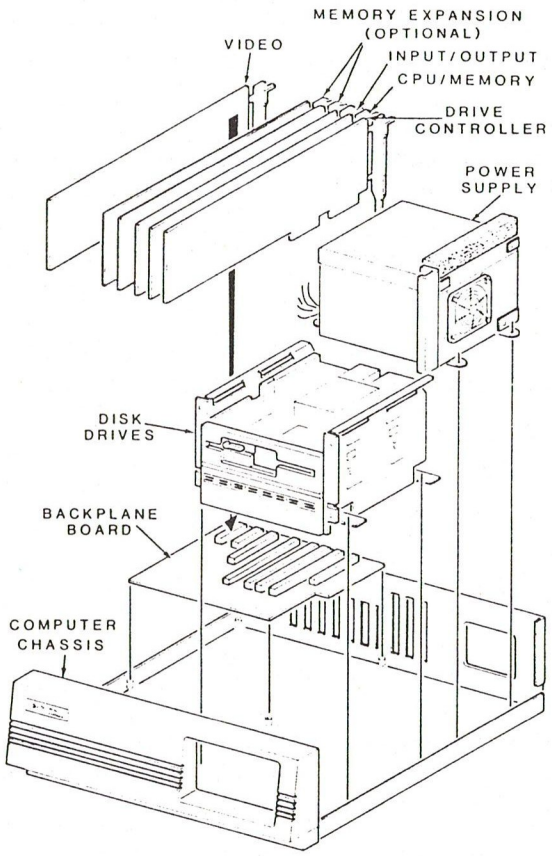

Figure 4-1. Under the Cover

Hardware Programming Jumper Blocks

Many of the circuit boards can be custom configured to accommodate optional features and hardware. Hardware programming jumpers may be used to select address, timing, and other options. In other cases, they are used to let the microprocessor know what type of hardware you have installed in your computer. In still other cases, the jumpers have been set at the factory for your particular computer. Do not change the setting of any jumpers without reading this chapter. Changing the setting of some jumpers can damage your computer.

Figure 4-2 illustrates a jumper block and the moveable jumpers that are used to change the hardware programming. To install a jumper, line the holes in the jumper up with the pins on the circuit board, then slide the jumper onto the pins. Be sure the computer is turned off before you change any jumper settings.

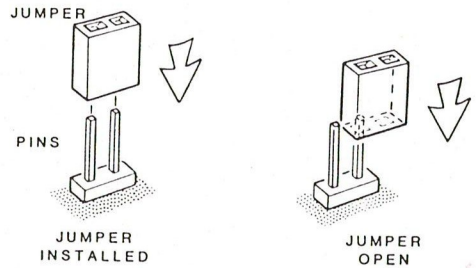

Figure 4-2. Hardware Programming Jumper Blocks

Power Supply

WARNING: Do not attempt to disassemble or service the power supply. There are no serviceable parts in it. Even with the power switch turned off, serious shock hazards may be present inside the power supply housing.

The power supply converts the 115 volts (or 230 volts) from your power outlet into the +5 VDC, -5 VDC, +12 VDC, and -12 VDC that power your computer. With 160 watts of power, the power supply

can support many different hardware configurations, such as one or two floppy disk drives, a floppy disk drive and a hard disk drive, and additional plug-in circuit cards. Five green LEDs on the backplane board light when the power supply is operating properly. The power supply also protects your computer from damage with automatic current and voltage limiting circuitry.

There are three types of connectors on the power supply, as shown in Figure 4-3. The 15-pin connector plugs into the backplane board to power the circuit cards, keyboard, and speaker. The 4-pin connectors supply power to the disk drives. The ground wire screws onto the backplane board.

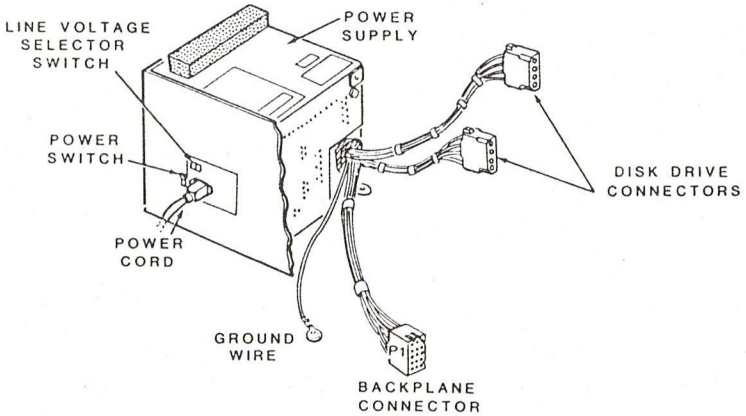

Figure 4-3. Power Supply

Backplane Board

The backplane board ties the entire computer together, providing the physical connection for address, data, and control signals between the circuit cards. It contains eight connector slots which accept cards. The slots are numbered 1 through 8, as shown in Figure 4-4. Two of the eight slots are PC AT-compatible, four are reserved for Zenith Data Systems cards, and two are PC-compatible slots. The keyboard interface, the backup battery that powers your real time clock and some computer memory when the computer is turned off, and five power supply status LEDs are also located on the backplane board.

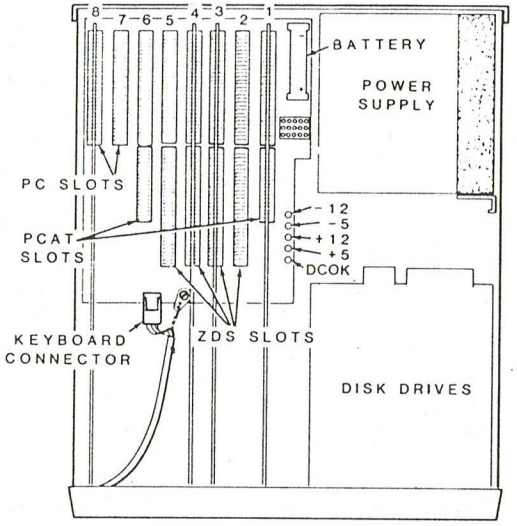

Figure 4-4. The Backplane Board

Keyboard Connector

The keyboard connector is mounted on the side of the computer chassis near the front of the computer. The keyboard cable plugs into the 5 pin keyboard connector. Position the cable so the pins line up with the holes in the keyboard connector. The connector pinout is shown in Figure 4-5. A description of the 101-key keyboard is included in Chapter 2.

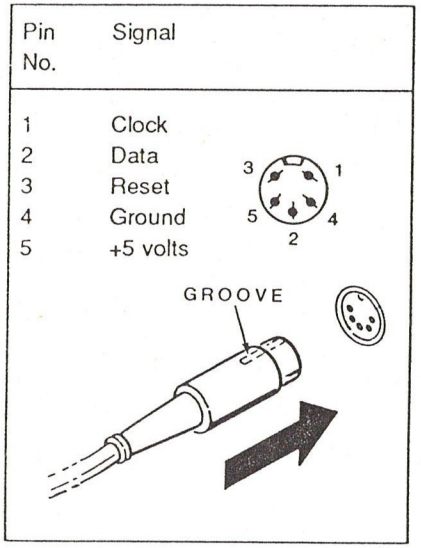

Figure 4-5. The Keyboard Connector

CPU/Memory Card

The CPU/memory card contains the 80286 microprocessor (also called a central processing unit or CPU), system memory (scratch pad RAM and ROM), user memory (base and expansion RAM), and system address, system data, and CPU bus control logic. The circuitry contained on this board also generates system timing signals and allows the addition of an 80287 numeric coprocessor to the system. Figure 4-6 shows the location of the main components on this card.

The CPU is the most important part of the computer. It processes information, performs arithmetic functions, and controls the rest of the computer system. The CPU circuitry is made up of several devices (called integrated circuits or ICs) and includes the 80286 microprocessor and the optional 80287 numeric coprocessor, the Monitor ROM, optional expansion ROM, system and user read/write memory, and several hardware programming jumper blocks.

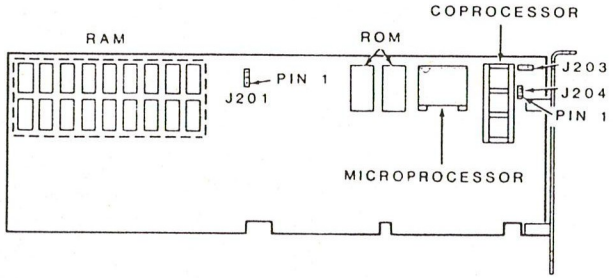

Figure 4-6. CPU/Memory card

Microprocessor

The 16-bit 80286 microprocessor IC in your computer consists of four sections:

- An instruction unit that decodes instructions and holds them until they can be executed by the microprocessor.
- An execution unit that sequentially carries out the instructions.
- An address unit that computes the addresses that will be sent out to memory or input/output devices.
- A bus unit that performs all memory and input/output read and write operations and fetches instructions for the instruction unit to decode.

Coprocessor

You can install an 80287 numeric data coprocessor IC in your computer to speed up certain types of calculations required by some applications. In those instances, the coprocessor assumes some of the arithmetic processing from the microprocessor. Only programs specifically designed to support the coprocessor , or that check to see if one is installed, will benefit from it. Installation instructions for the coprocessor are in Chapter 5.

Read-Only Memory (ROM)

Two IC's store the Monitor program that the computer needs to operate. Since this program may be used, but not changed, it is known as firmware. The Monitor program is described in Chapter 3. There are also two sockets that allow you to install two expansion ROM ICs in your computer for custom operations. Chapter 5 contains installation instructions for expansion ROM ICs.

Read/Write Memory

This memory is both a temporary storage area and a work area for the information and programs your computer system handles. This memory, also called RAM (Random Access Memory), is where your computer stores data while it is working on some application. Obviously, the larger the RAM space, the more information that can be handled.

Memory is measured in bytes. Each byte represents approximately one character or keystroke. The address unit lets the microprocessor handle up to one gigabyte memory. Present technology allows you to expand the memory capacity from 512K to 1.5M with a memory expansion board. A group of eighteen 256k × 1 RAM chips make up the base memory on the CPU/memory card. Chapter 5 includes instructions for installing a memory upgrade.

Hardware Programming Jumper Blocks

You may need to change the setting of the jumpers at J201, if you install expansion ROMs. Jumpers J203 and J204 may need to be changed if you install a numeric coprocessor.

WARNING: Do not change the setting of any other jumper blocks on the CPU/memory card. They are factory set for your computer and any changes may damage your computer.

Expansion ROM Device Selection (J201) — Jumper block J201 contains five pins that are used to select the expansion ROM addresses. If your expansion ROMs are 32 kilobit × 8 bit devices, install a jumper pins 1 and 2 and a jumper on pins 3 and 4. This is the default setting. If your expansion ROMs are 16 kilobit × 8 bit devices, install a jumper on pins 2 and 3 and a jumper on pins 4 and 5.

80287 Clock selection (J203 and J204) — Jumper block J203 contains two pins and J204 contains three pins that are used to select the clock speed for the 80287 numeric coprocessor. Your computer circuitry allows the 80287 to operate at either 5.3 MHz or 8 MHz, depending upon your application program's needs.

To select 5.3 MHz operation, install a jumper on pins 1 and 2 of J203 and a jumper on pins 1 and 2 of J204. This is the default setting. To select 8 MHz operation, install a jumper across pins 2 and 3 of J204 and leave J203 open.

Input/Output Card

The keyboard, calendar and clock, speaker, parallel port, and serial port are connected to the CPU through the input/output card. The input/output card also contains address decoding, direct memory access (DMA), and control signal generation circuits which enable your computer to complete tasks quickly and efficiently. These components are illustrated in Figure 4-7.

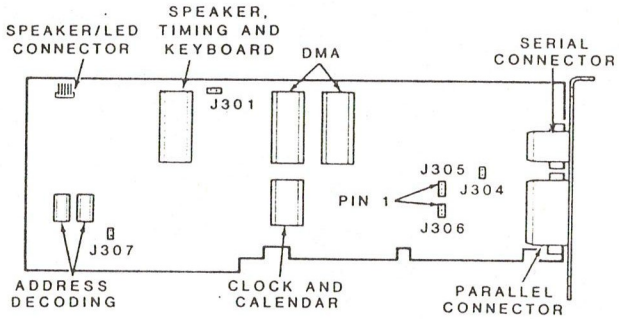

Figure 4-7. Input/Output Card

Parallel and Serial Ports

Other input/output devices can be added to your computer. These devices (printer, plotter, mouse, modem, etc.) plug into either the parallel port connector or serial port connector located on the back panel of your computer.

Parallel Connector

There is a DB-25 connector (the oblong connector with 25 holes) on the input/output card. This parallel port connector, accessible through the rear panel of the computer, is most often used to connect a printer to your computer.

The connector is configured to drive Centronics-type devices, such as a parallel printer. The Centronics standard has been adopted by a large number of manufacturers. Note that you must have the proper cable to use the DB-25 connector.

The MS-DOS operating system automatically configures the port as a standard printer port. This means that all you need to do if you are using a parallel printer is connect it to the parallel port on the computer. If you are using another operating system, check its documentation for the parallel port configuration. Figure 4-8 defines the parallel printer port signals and corresponding pins.

Pin No.	Signal	Pin No.	Signal
1	Strobe	10	Acknowledge
2	Data bit 0	11	Busy
3	Data bit 1	12	Page end
4	Data bit 2	13	Select
5	Data bit 3	14	Auto feed
6	Data bit 4	15	Error
7	Data bit 5	16	Initialize printer
8	Data bit 6	17	Select input
9	Data bit 7	18-25	Ground

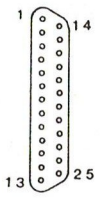

Figure 4-8. The Parallel Connector

Serial Connector

The serial port is a 9-pin D-type connector configured to drive RS-232C serial devices. Figure 4-9 identifies the signal names and the corresponding pins for this connector. Before using any serial device connected to this port, you must make sure that both the computer and the serial device are "speaking the same language". This is accomplished by configuring the communications protocol.

The communications protocol is the set of parameters which control the exchange of information between the computer and the serial peripheral. No one protocol is best, but your computer and the peripheral must use the same protocol. Your operating system manual and the documentation accompanying your peripheral will provide specific information for your particular application.

Pin No.	Signal	Pin No.	Signal
1	Carrier Detect	6	Data set ready
2	Receive data	7	Request to send
3	Transmit data	8	Clear to send
4	Data terminal ready	9	Ring indicate
5	Ground		

Figure 4-9. The Serial Connector

Clock and Calendar

Once the Z-200 Hardware Setup/Configuration Program has been run, your computer will keep the correct time and date. This is useful for application programs which require a date or time reference. Chapter 2 provides instructions for setting the clock and calendar.

An integrated circuit on the input/output card performs the clock and calendar operations. A 3.6 volt lithium battery on the backplane board keeps the clock and calendar running. This chip also

contains the CMOS RAM used to retain the Setup/Configuration Program information when the power is off.

Direct Memory Access (DMA)

For some operations, such as loading a program or data from your disks into memory, the microprocessor gives control of the computer to the direct memory access circuitry on the input/output card. This allows rapid transfers of information, since the information can go directly from the disk into memory, without passing through the microprocessor.

Hardware Programming Jumper Blocks

There are five jumper blocks on the input/output card which affect the operation of the computer. Figure 4-6 illustrates the location of each of the jumper blocks. Table 4-1 identifies each of the jumper blocks by general use.

WARNING: Do not change the setting of any other jumpers on the input/output card. They are factory set for your computer and any changes may damage your computer.

Table 4-1. Input/Output Card Jumper Block Identification

JUMPER BLOCK	DESCRIPTION
J301	Video card selection
J304	AC OK interrupt selection
J305	Parallel port interrupt request selection
J306	Serial port interrupt request selection
J307	Parallel and serial port address selection

Video card selection (J301) — Jumper block J301 contains two pins that are used to select either a color video controller card or a high-resolution monochrome video controller card. The setting of this jumper overrides the video information stored in CMOS RAM by the Setup/Configuration Program .

To select a color video controller board, install a jumper on the pins. Your computer is shipped with this jumper installed. Leaving the pins open selects a high-resolution monochrome video controller board.

AC OK interrupt selection (J304) — Jumper block J304 contains two pins that enable the power supply's AC OK signal to trigger a non-maskable interrupt (NMI). This prevents the CPU from treating a power supply malfunction, power failure, or brown-out as if it were a program or data.

To trigger a NMI with the AC OK signal, install a jumper on the pins. This is the default setting. To prevent the AC OK signal from triggering a NMI, leave the pins open.

Parallel/serial port interrupt and address selection (J305, J306, J307) — These three jumper blocks configure the parallel port and the serial port located on the input/output card. Each contains three pins that are used to select the address of the ports and the interrupt lines that will service the ports. The three jumpers should be configured as a set for PC AT compatibility.

To select port addresses 3F8H through 3FFH (COM1) for the serial port and 378H through 37FH (LPT1) for the parallel port, install a jumper on pins 1 and 2 of each of these jumper blocks. This is the default configuration.

To select port addresses 2F8H through 2FFH (COM2) for the serial port and 278H through 27FH (LPT2) for the parallel port, install a jumper on pins 2 and 3 of each of these jumper blocks.

Disk Drive Controller Card

As the name of the card implies, the disk drive controller card contains special control circuitry for the disk drives. Several different manufacturers supply the disk drive controller cards.

Your computer may have a disk drive controller card designed to work only with floppy disk drives, or it may have one designed to work with both floppy and hard disk drives. There are also several different manufacturers that supply disk drives for your computer. If you change or add a disk drive, contact your service representative for the correct settings for the hardware programming jumpers or switches.

Disk Drive Chassis

Your computer can accommodate a maximum of two disk drives. These assemblies contain the mechanical and electronic components necessary to transfer data from memory to floppy or rigid disks. One or more of the following drives is installed in your computer.

- 360-kilobyte, 5.25 inch, 48-tpi, half-height double-sided, double-density floppy disk drive
- 1.2-megabyte, 5.25 inch, 96-tpi, half-height double-sided, high-density floppy disk drive
- 20-megabyte, 5.25 inch, half-height fixed rigid disk drive

The drives are mounted in the disk drive chassis, shown in Figure 4-10, inside your computer.

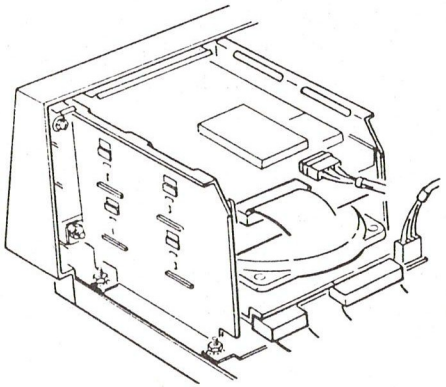

Figure 4-10. Disk Drive Chassis

Usually, the top slot in the disk drive chassis is reserved for floppy disk drive A. The lower slot may contain your hard disk drive, a second floppy disk drive (drive B), or may be empty.

Each disk drive has hardware programming jumpers or switches that need to be set if you add or change a disk drive. Contact your service representative for the correct settings.

Video Controller Card

This card contains circuitry to control the high-resolution analog, color graphics (CGA), enhanced graphics (EGA), or monochrome video display. It contains video memory, control signal, video timing, and character generation circuitry.

As shipped from the factory, your video controller card is set for either a high-resolution analog monitor or a multisync monitor. Use the information from Table 4-2 and change the setting of the 6-section DIP (Dual In-line Package) switch if you are connecting a standard EGA-compatible monitor, CGA-compatible monitor, or a TTL-compatible monochrome monitor to your computer.

The DIP switch is clearly marked with section numbers and ON and/or OFF positions. Use a small tool to move the sections into the correct position. (Worn out dental tools are particularly handy for setting DIP switches. Ask your dentist, they are usually happy to get rid of old, worn tools.) Figure 4-11 shows some typical DIP switches.

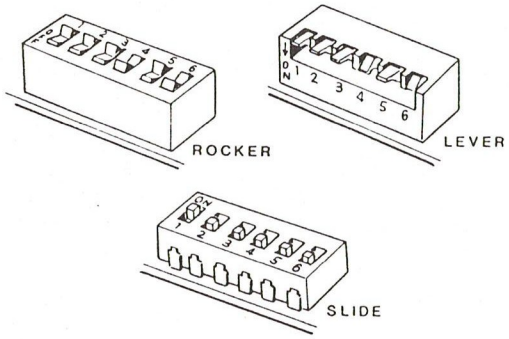

Figure 4-11. Typical DIP Switches

Table 4-2. Video Controller Card Configuration

MONITOR USED	DIP SWITCH SECTIONS 1	2	3	4	5	6
Monochrome[1]	OFF	OFF	ON	OFF	ON	OFF
Color (80 × 25)	OFF	OFF	OFF	ON	ON	OFF
Color (40 × 25)	ON	OFF	OFF	ON	ON	OFF
Enhanced RGB (200 line)	ON	ON	ON	OFF	ON	OFF
Standard Enhanced RGB (350 line)	OFF	ON	ON	OFF	ON	OFF

Table 4-2 (continued). Video Controller Card Configuration

MONITOR USED	DIP SWITCH SECTIONS 1	2	3	4	5	6
Multisync and High-Resolution Analog[2]	OFF	ON	ON	OFF	ON	ON

NOTES:

1. Some monochrome monitors operate with color signals rather than monochrome signals. Check your monitor documentation. If the monitor uses RGB signals, set the DIP switch for the appropriate color or enhanced color mode.

2. This is the default setting.

The setting of sections 1 through 4 of the video controller card DIP switch, which is accessible through the back panel, determines the video signals that are present on the pins of the video connectors. Table 4-3 defines the signals at the 9-pin connector and Figure 4-12 identifies the corresponding pins.

Table 4-3. 9-Pin Video Connector Pinout

PIN	MONOCHROME	COLOR	ENHANCED COLOR
1	Ground	Ground	Ground
2	Ground	Ground	Secondary Red
3	Red	Red	Red
4	Green	Green	Green
5	Blue	Blue	Blue
6	Intensity	Intensity	Secondary Green
7	Video	—	Secondary Blue
8	Hor. Sync.	Hor. Sync.	Hor. Sync.
9	Ver. Sync.	Ver. Sync.	Ver. Sync.

Switch section 5 enables automatic emulation of EGA, CGA, and other video display drivers. As shipped from the factory, the card is

set to change modes as your software requires. To disable this feature, move switch section 5 to the OFF position.

Switch section 6 enables the high resolution analog RGB color video connector (the 15-pin D-type connector). This switch section must be in the ON position if you are operating a high resolution analog RGB color video monitor. If you are connecting any other type of monitor to the computer, use the 9-pin D-type connector and set switch section 6 to the OFF position. Remember, failure to correctly set this switch can damage your monitor and your computer.

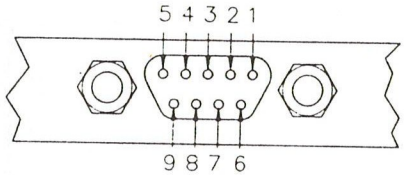

Figure 4-12. The 9-Pin Video Connector

Figure 4-13 defines the signals and identifies the corresponding pins on the 15-pin video connector.

PIN NUMBER	SIGNAL
1	Red video
2	Green video
3	Blue video
4	N/C
5	Reserved (test)
6	Red video ground
7	Green video ground
8	Blue video ground
9	N/C
10	Digital/sync ground
11	Reserved (mode)
12	Reserved
13	Horizontal Sync
14	Vertical Sync
15	N/C

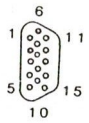

Figure 4-13. The 15-Pin Video Connector

Hardware Programming Jumper Blocks

There are two jumper blocks on the video controller card that select the type of video monitor you are connecting. Figure 4-14 illustrates the location of each of the jumper blocks. The jumper blocks are labeled P1 and P3.

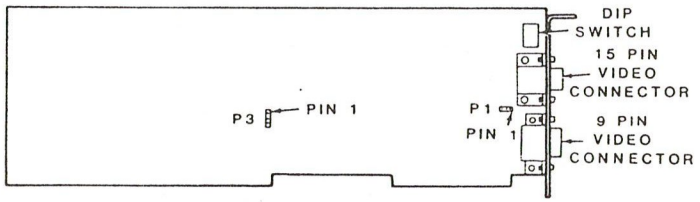

Figure 4-14. The Video Controller Card

CAUTION: Your video monitor may be damaged if these jumpers are incorrectly set. Be sure you set them correctly for your video monitor. Contact your service representative if you have any questions about the type of video monitor you are connecting.

If you are connecting a high-resolution analog, multisync EGA, or standard EGA video monitor, install a jumper across pins 1 and 2 of both P1 and P3. This is the factory setting for your video card.

If you are connecting a CGA or a monochrome video monitor, install a jumper across pins 2 and 3 of PI and across pins 1 and 2 of P3.

Optional Memory Expansion Cards

The two optional memory expansion cards contain additional memory chips which increase the size of your base memory to 640 kilobytes and your expansion memory to 2.5 megabytes. Chapter 5 contains instructions for installing optional circuit cards in your computer.

The first memory expansion card is installed in slot 5. It contains one bank (bank 0) of eighteen 64K read/write memory (RAM) chips and one bank (bank 1) of eighteen 256K RAM chips. Sockets are available to add a second bank (bank 2) of eighteen 256K RAM chips. Figure 4-15 shows the location of the memory banks.

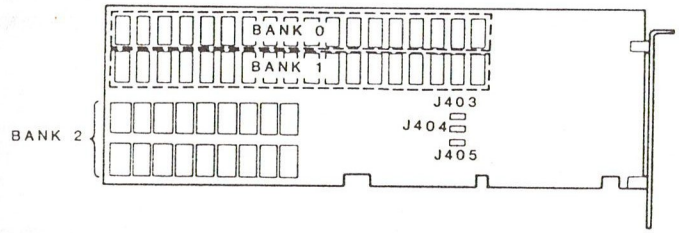

Figure 4-15. Memory Expansion Cards

As shipped from the factory, the first bank of memory chips increases the base memory size from 512K to 640K. The second bank creates 512K of expansion memory. The third bank increases the expansion memory to 1M when eighteen 256K RAM chips are installed. The first memory expansion card must be completely filled before you can install the second memory expansion card. Chapter 5 contains instructions for installing optional integrated circuits.

The second memory expansion card is installed in slot 6. It contains three banks of eighteen 256K RAM chips, creating an additional 1.5M of expansion memory. This card is shipped from the factory with the eighteen 256K RAM chips needed to fill bank 2 of your first memory expansion card.

Hardware Programming Jumper Blocks

There is one jumper block on each of the memory expansion cards which affects the operation of the computer. Figure 4-15 illustrates the location of the jumper block.

CAUTION: Do not change the setting of any other jumpers on either memory expansion card. They are factory-set for your computer and any changes may damage your computer.

Jumper block J403 determines whether the first 128K of memory on the expansion memory card is to be used to bring the base memory up to its maximum (640K) or as expansion memory. Install a jumper across the pins of J403 to increase the size of the base memory. Leave J403 open to increase the size of the expansion memory. The first memory card is factory-set to increase the size of the base memory. The second memory card is factory-set for expansion memory.

Specifications

The following specifications apply to your computer. Optional features that may or may not be present on some models are indicated.

Backplane	Two PC AT-compatible connectors, two PC-compatible connectors, four Zenith Data Systems connectors.
Battery backup	3.6-volt, AA-size lithium cell powers a real-time clock.

Power supply	160 watts. DC output: +5 VDC, -5 VDC, +12VDC, 12VDC. AC input: 100-130VAC or 200-230VAC, switch selectable. Status signals: Active high, TTL-compatible DC OK and AC OK.
Processors	Intel 80286 16-bit microprocessor, optional Intel 80287 numeric coprocessor.
Memory	512K standard, expandable to 2.5M.
Video	High-resolution analog standard; color graphics and color text modes suitable for high-resolution analog, multisync and standard EGA, CGA, and TTL-compatible monochrome video monitors. Automatic detection and emulation of EGA, CGA, MDA, and HGC modes. Text (alphanumeric): 40 or 80 characters per line, 25 lines per screen. Graphics (all points addressable): High-resolution analog (640×400), Enhanced color (640×350), Color (320×200 and 640×200), Monochrome text (720×350), Monochrome graphics (640×350). Sixteen colors selectable from a palette of 256,000 for high-resolution analog applications. Sixteen colors selectable from a palette of 64 for EGA applications.

	High-resolution analog RGB output through 15-pin subminiature D-type connector.
	RGBrgb, RGBI, or TTL-compatible monochrome output through 9-pin D-type connector.
	256 kilobytes of video RAM.
	Horizontal scan frequencies: High-resolution analog: 31.49 kHz CGA: 15.75 kHz MDA and HGC: 18.4 kHz EGA: 21.85 kHz.
Keyboard	101-key QWERTY with extended capabilities; 5-pin DIN connector mounted on the chassis.
Audio	One 8-ohm, 2-inch speaker.
Input/output ports	One Centronics-type parallel port; One RS-232C serial port;
Disk drives	Supports a maximum of two double-sided, double-density, soft-sectored floppy disk drives and one fixed hard disk drives.

Chapter 5

Adding to Your Computer

This chapter provides installation instructions for options that can be added to your computer to enhance its performance. These options include:

Additional circuit cards — You may choose to enhance your computer by adding a game card, secondary video card, or other special-function cards.

An 80287 numeric coprocessor — Some software programs use the 80287 to speed up processing and calculations of numeric data.

Expansion ROMs — For some special applications, you may want to enhance your computer with custom firmware.

Additional memory — You can increase the memory capacity of your computer by installing expansion memory cards and integrated circuits.

Most options that you install in your computer are accompanied by their own documentation. After using the installation instructions in this manual, refer to the option's documentation for configuration and operation information.

Preparation

Before any options can be installed in your computer, you must partially disassemble the computer.

WARNING: Potentially lethal voltages are present inside your computer whenever the power cord is connected to an AC source. Disconnect the power cord and all peripheral devices from your computer before attempting disassembly.

CAUTION: Hard disk drives are very fragile and can easily be damaged. Run the MS-DOS SHIP utility (or other similar operating system utility which parks the read/write heads of your hard disk drive in the shipping zone) before disassembling computers with hard disk drives installed.

Also, the circuit cards in your computer can be easily damaged by static electricity. To prevent damage to the components, have protective packaging available for any cards you plan to remove. Do not let go of the circuit cards you remove from your computer until they have been placed in protective packaging. Do not let go of new circuit cards once they have been removed from their protective packaging until you have installed them in your computer.

The following tools are needed to install optional hardware in the your computer:

- A slotted screwdriver
- A standard #2 phillips head screwdriver

You should also have some small plastic bags, jars, or envelopes at hand. Use these to hold washers, nuts, screws and other parts you remove and need to save for reassembly. It is much easier to reassemble your computer if the parts you removed are labeled and kept together. For example, you will want to put all the cover screws together in one jar, bag, or envelope and set them aside with the cover.

Removing the Cover

1. If your computer has a hard disk drive installed, run an operating system utility to park the read/write heads.

2. Turn the power switch OFF and disconnect the keyboard, video monitor and any other peripherals from their AC source and then from your computer.

3. Disconnect the power cord from the computer.

4. Remove the seven screws that secure the top cover to the computer chassis, as shown in Figure 5-1. Save these screws; you will need them when you reassemble your computer. A small plastic bag is handy for keeping these screws together until you are ready to use them again.

5. Slide the cover back to clear the front of the computer cabinet (approximately 1/2 inch), then lift the cover up and off the computer.

6. Set the cover and screws aside. Keep them together so you can use them when you are ready to reassemble your computer.

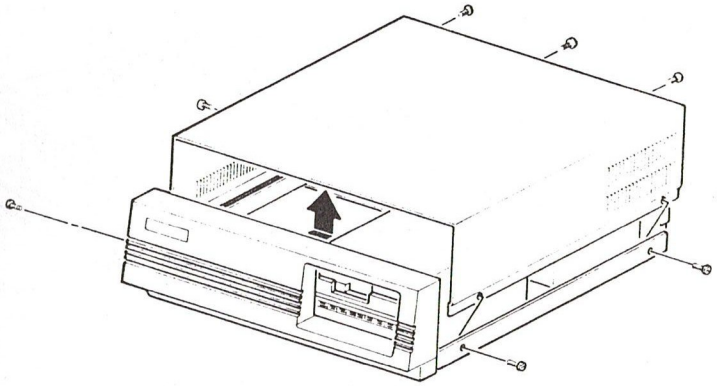

Figure 5-1. Removing the Cover

Installing a Circuit Card

Figure 5-2 shows the inside of a typical computer. Notice the locations of the circuit cards, power supply, disk drive chassis, and expansion slots. To assure that all the functions of your computer operate correctly, the factory-installed circuit cards must remain in their assigned slots.

Your computer has two PC-compatible, one PC AT-compatible, and one ZDS compatible expansion slots. Choose an appropriate slot when installing an optional card. For example, install only PC-compatible cards in the PC-compatible slots.

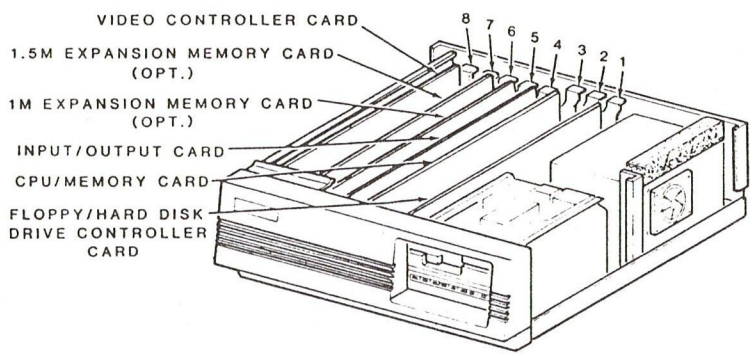

Figure 5-2. Inside Your Computer

CAUTION: The circuit cards in your computer can be easily damaged by static electricity. To prevent damage to the components, have protective packaging available for any cards you plan to remove. Do not let go of the circuit cards you remove from your computer until they have been placed in protective packaging. Do not let go of new circuit cards once they have been removed from their protective packaging until you have installed them in your computer.

Refer to Figure 5-3 for the following procedure:

1. If your computer has a hard disk drive installed, run an operating system utility to park the read/write heads.

2. Remove the cover using the procedure in the preceding section.

3. Use the information from Table 5-1 to select the appropriate slot to install your new card and remove and save the screw that secures the blank panel, or the card you are replacing, in that slot. Figure 5-3 shows the location of this screw.

Table 5-1. Card Slot Assignments

SLOT NUMBER	CARD
1	Disk drive controller card
2	ZDS-compatible card
3	CPU/memory card
4	Input/Output card
5	1M memory expansion card
6	1.5M memory expansion card
7	PC-compatible card
8	Video controller card

4. Lift the blank panel or card up and out of the computer.

5. Refer to the documentation for the new card and configure any hardware programming jumper blocks or switches, as necessary.

   NOTE: A card guide adapter (Part no. 94-654) was packed with your computer. Use it when the card you are installing is shorter than the computer chassis.

6. Position the edge connector of the new card directly over the slot on the backplane board. Be sure the card is aligned with the front card guide.

7. Apply gentle downward pressure until the card is firmly seated in the slot on the backplane board.

8. Secure the card to the chassis using the screw you removed earlier.

9. Connect any internal cables. Make sure they do not extend above the top of the disk drive chassis.

10. Replace the cover and secure it using the seven screws that you removed and set aside with the cover when you began disassembling your computer.

11. Reconnect your power cord, video monitor, keyboard, and any peripherals to your computer and then to their AC power source.

12. Power up your computer. The following message will probably appear on your video monitor:

```
+++ ERROR:  Bad configuration information found in CMOS! +++

--- Errors found!  Please press <Esc> to continue ---
```

If the error messages appear on your screen, press the ESC key and update the hardware information stored by the Setup/Configuration Program. Chapter 3 contains information on using this program.

If no error messages appear on your screen, enter the Monitor program using the CTRL-ALT-INS key combination, and update the hardware information stored by the Setup/Configuration Program.

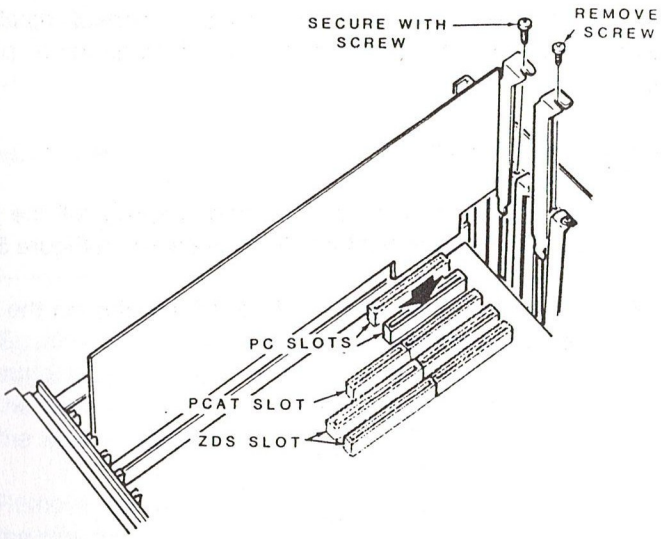

Figure 5-3. Installing a Circuit Card

Installing an Integrated Circuit

The 80287 numeric coprocessor, expansion ROM, and some memory options require the installation of one or more integrated circuits onto circuit cards. Most integrated circuits can be damaged by static electricity if they are handled improperly. Use the following precautions when handling ICs to prevent damaging them.

- When working with ICs, hold the IC in one hand and touch the work surface or circuit card with your free hand before you place the IC on the surface or install it in the circuit card. This will equalize the static electricity between the work surface and IC.

- Once you remove an IC from its protective packaging, do not lay it down or let go of it until it is installed on the circuit card or put back in its protective packaging.

- The pins on an IC must be straight and line up with the holes in the socket before the IC can be installed. Do not attempt to install an IC unless the pins are aligned. Incorrect installation may result in intermittent contact and can damage the IC pins or the socket.

To align the pins of an IC:

1. Lay the IC down on its side and carefully roll the IC so that the pins are bent into line, as shown in Figure 5-4.

2. Turn the IC over and gently bend the pins on the other side the same way.

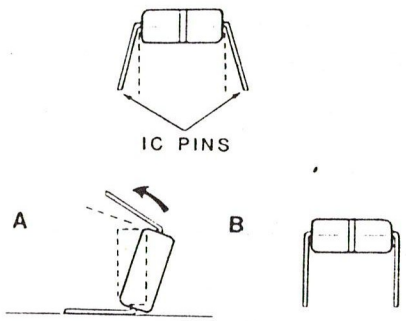

Figure 5-4. Aligning IC Pins

To install an IC:

1. Run the SHIP utility if your computers has a hard disk drives installed.

2. Remove the top cover using the procedure listed earlier in this chapter.

3. Use the information in Table 5-2 to identify the appropriate circuit card and remove it using the procedure in the proceeding section.

Table 5-2. Optional IC Locations

OPTIONAL IC	CIRCUIT CARD	SLOT NUMBER	SOCKET NUMBER
Expansion ROM	CPU/memory card	3	U215 and U216
80287	CPU/memory card	3	U219
Expansion RAM	1M Memory card	5	U401-U418 U425-U442 U449-U457 U471-U479

4. Equalize the static electricity between the card and the work surface by holding the circuit card in one hand and touching the work surface with your free hand, and then set the card on the work surface.

5. Remove the IC from its protective packaging and roll it to align the pins for insertion into the socket.

6. Use the information from Table 5-2 to find the appropriate socket for the IC you are installing.

7. Align the pin 1 index on the IC with the pin 1 index on the circuit card, as shown in Figure 5-5,and insert the IC into its socket.

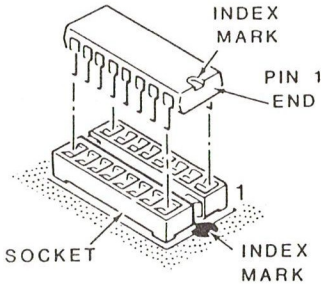

Figure 5-5. Installing an IC

8. Use the instructions for installing a circuit card to install the upgraded card into its slot and reassemble your computer.

Chapter 6

Maintenance and Servicing

Your computer is well-designed and needs very little maintenance. However, even the most well-designed and reliable equipment may malfunction and require servicing. Many times the reason for a malfunction is simple and you can solve the problem yourself. Other times, you can detect and isolate potential problems during a test procedure and prevent a malfunction from occurring.

This chapter tells you what you can do to maintain and service your computer so that you can keep it in top running order now and for years to come. This chapter includes:

- A checklist of some commonly experienced problems that can be easily solved.
- A list of power-up messages that might be displayed as a result of the automatic testing that occurs each time you turn your computer on. The list identifies the likely cause of each message and explains various solutions.
- A description of the tests you can run from the keyboard to check various parts of the computer. These tests are built-into the Monitor program and can help you diagnose a variety of problems.
- Some brief cleaning and general maintenance procedures, including instructions for replacing the backup battery that powers your calendar and clock.
- Service support information for those instances when you need to have your computer serviced.

In addition to the testing, maintenance and other support procedures described in this manual, disk-based diagnostics are available to help you further detect and identify malfunctions in your computer. The disk-based diagnostics package consists of a floppy

disk containing comprehensive diagnostic tests and a manual explaining the various tests.

Checklist of Common Problems

What first appear to be a major problem or malfunction may really be a minor problem that can be corrected easily. Read through this section to see if the condition you are experiencing is listed. If it is, checking the probable causes listed after it will most likely resolve it.

Nothing happens when the computer is turned on. The green light on the front panel of the computer is not lit and the fan does not run.

1. Verify that computer power switch is in the ON position. If you are using a switched multiple outlet box, make sure that the switch is turned on.

2. Check the AC power cord to be sure it is securely connected to the computer and to an AC outlet. If you are using a multiple-outlet box, check its connections.

3. Check the power cord for damage. If it needs to be replaced, have a qualified service representative replace it with a cord of the same type and rating.

4. Make sure the AC outlet is working. Plug a different electrical device (such as a lamp) into the outlet and turn it on.

5. Make sure the line voltage select switch is set for the proper voltage for your area.

6. Make sure that all five of the green diagnostic LEDs on the backplane board are lit. If one or more of these lights are not on, your power supply cable may not be securely connected to the backplane board. Verify that the power supply cable is securely connected to the backplane board and to the disk drives. Also check the speaker/LED cable to be sure it is correctly connected to the input/output card. (You will have to partially disassemble the computer to check these things. Refer to Chapter 5 for the correct disassembly procedure.)

The computer does not boot automatically when powered up or reset.

1. Make sure you are using a bootable disk, that is, one that has been formatted and has the operating system on it.

2. Make sure that the disk is inserted properly in the disk drive.

3. Make sure that the disk drive door or latch is closed.

4. Use the CTRL-ALT-INS key combination to enter the Monitor program, then check the boot drive information stored by the Setup/Configuration Program.

The computer resets to the power-up point or the disk keeps rebooting.

1. Check for a loose power cord.

2. Try another bootable floppy disk; the one you are using may be bad.

3. Make sure that the ribbon cables are correctly and securely connected to the disk drives and the disk drive controller board. Also, check to be sure that all of the cards are securely seated in their slots. (You will need to partially disassemble the computer to check the ribbon cables and cards. Refer to Chapter 5 for the correct disassembly procedure.)

The video monitor has a blank screen, distorted display, insufficient brightness, or excessive brightness.

1. Make sure the monitor is connected to a working AC outlet and that the power switch is in the ON position.

2. Verify that the monitor is properly and securely connected to the computer. Check the screws that secure the video cable to the computer.

3. Adjust the brightness and contrast controls on the monitor.

4. Make sure that the input/output card and video controller card are securely seated in their slots. Also, check the setting of hardware programming jumper block J301 on the input/output card. If you are using the high-resolution analog video controller card that was shipped with your computer, a shorting block should be installed. The pins should be open if you are using a high-resolution monochrome video controller card. (You will need to partially disassemble your computer to check these.)

The computer powers-up, automatically boots or enters the Monitor program, but does not respond to the keyboard. Pressing the keys has no effect on the computer; the NUM LOCK LED is not lit.

1. Make sure that the keyboard plug is securely seated in the keyboard connector.

2. Make sure that the keyboard cable is securely connected to the backplane board. Also make sure that the cards are securely seated in their slots. (You will need to partially disassemble the computer to check the keyboard cable and cards.)

Power-Up Tests and Messages

The Monitor program contains instructions that cause the computer to automatically perform a series of self-tests whenever it is powered-up or reset. You will see the disk drive access LEDs and keyboard LEDs light, and hear the computer beep while the tests are in progress. As the computer successfully completes each set of tests, it extinguishes the LEDs on the input/output card in succession. You will need to partially disassemble the computer to see the LED. They are shown in Figure 6-1.

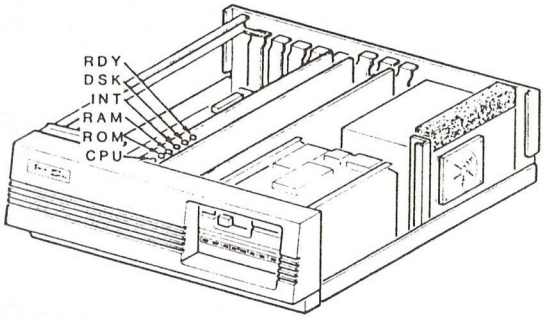

Figure 6-1. Input/Output Card LEDs

Occasionally, a malfunction occurs that prevents anything, including an error message, from being displayed. If nothing is displayed and the computer does not appear to be functioning after it has been powered up or reset, contact your service representative. It may take a few minutes after power-up or reset for your computer to complete self-testing and generate some error messages. If you see only a blinking cursor on the video monitor, or if the computer does not display the prompt you were expecting or an error message, or if it does not respond to the keyboard, then wait. Some problems may take the computer as long as five minutes to identify.

If the computer fails any of the self-tests, it attempts to display a message on the video monitor. These messages are generated by the Monitor program. Some of the more common power-up messages are listed below. Explanations are included with each message to help you identify and correct the problem. The list does not include all possible error messages, hardware problems, or solutions. It simply lists those malfunctions or error messages that are most likely to occur.

```
+++ ERROR:  Please replace the back-up battery! +++
+++ ERROR:  Bad configuration information found in CMOS! +++

--- Errors found!  Please press <Esc> to continue ---
```

These messages mean that the computer has detected a difference between the hardware actually installed in your system and the

information about your hardware that is stored in the computer's memory.

If you see any of these error messages, press the ESC (escape) key. The Z-200 Hardware Setup/Configuration Program will appear on the screen. Refer to Chapter 3 for instructions and use the Setup/Configuration program to update the hardware information stored in memory.

Generally, once this information has been updated, your computer will operate properly. If, however, this message appears each time you turn your system on, replace the backup battery or contact your service representative.

```
+++ ERROR: CPU failure! +++
+++ ERROR: ROM checksum failure! +++
```

These messages indicate that the microprocessor or read-only memory circuits may not be functioning correctly. Try turning the computer OFF, and leaving it off for 20 or 30 seconds while you check the keyboard and other peripheral connectors to be sure they are properly seated, and then turning it back on. If this does not correct the problem, contact your service representative.

```
+++ ERROR:  Overflow! +++
+++ ERROR:  RAM failure!
            Address: XXXX:YYYY, Bit: N, Chip: Uxxx +++
+++ ERROR:  Parity hardware failure!
            Address: XXXX:YYYY, Bit: N, Chip: Uxxx +++
+++ ERROR:  Parity failure! +++
+++ ERROR:  Memory Parity Failure! +++
```

If these messages appear, the power-up self-tests of the parity circuitry, system memory, or Monitor ROM were not successfully completed. When a chip number is displayed, it indicates the particular memory IC that is most likely to have failed.

```
+++ ERROR:  Timer interrupt failure! +++
```

This message indicates that the interrupt control or timer logic on the input/output card may have failed. If optional circuit cards have been added to your computer, make sure they are properly installed and have been configured correctly.


```
+++ ERROR:  Base memory size error!
            SETUP: XXXK   ACTUAL: YYYK +++
+++ ERROR:  Expansion memory size error!
            SETUP: XXXXXK  ACTUAL: YYYYYK +++
+++ Divide by zero! +++
```

Usually these messages indicate that the Setup/Configuration Program has stored incorrect information in the computer's memory. Try pressing the ESC key and then use the CTRL-ALT-ENTER key combination to reach the Monitor prompt (->). Run the Setup/Configuration Program and update the information stored there. If this does not correct the problem, contact your service representative.

```
+++ ERROR:  Keyboard not responding or not connected! +++
+++ ERROR:  Invalid/No keyboard code received! +++
```

The keyboard normally sends a special code at power-up to tell the computer that it is functioning properly. The most common cause of these messages is a disconnected keyboard. Make sure the keyboard is connected to the computer.

```
+++ DISK ERROR:  Drive not ready! +++
+++ DISK ERROR:  Bad disk controller! +++
```

If incorrect floppy or hard disk drive information has been stored in the computer's memory, one of these messages is likely to appear on your video monitor. Try using the CTRL-ALT-INS or the CTRL-ALT-ENTER key combination to enter the Monitor program. Run the Setup/Configuration Program and verify that it contains the correct drive information.

Attempting to boot a floppy disk drive with no disk in the drive or the drive latch or door open can also cause these messages. Make sure there is a disk in the floppy disk drive and that the latch or door is closed, and then try booting the drive again.

Finally, check the ribbon cables that connect the drives to the disk drive controller card. Make sure they are securely seated. (You will need to partially disassemble your computer to check this.) If the message persists, contact your local service representative. A

faulty disk drive controller circuit or disk drive may be the source of the problem.

```
+++ DISK ERROR:  DMA overrun! +++
```

A faulty disk controller circuit may cause this message. It may also appear if an optional circuit card malfunctions. If any optional or nonstandard cards have been installed in your computer, such as a parallel/serial input/output card or game card, remove them and run the power-up tests again. If the problem no longer occurs, replace the cards one at a time and repeat the power-up tests after installing each card. When the computer no longer functions or the error message reappears, the card you last installed is likely to be defective.

```
+++ DISK ERROR:  Disk not bootable! +++
No system
Not a bootable partition
```

Any of these messages may occur when the computer attempts to boot from a disk that does not contain the operating system. Most often, you can correct this by using a disk that has the operating system on it. You may need to format a hard disk and load the operating system onto it. If these messages occur often, have your service representative check the disk drive alignment and disk drive controller circuitry.

```
+++ DISK ERROR:  Sector not found! +++
+++ DISK ERROR:  CRC error! +++
+++ DISK ERROR:  Invalid address mark detected! +++
+++ DISK ERROR:  Seek failure! +++
+++ DISK ERROR:  Invalid data read! +++
```

Any of these messages may occur when the computer attempts to load the operating system, an application program, or data from a floppy disk. The most common cause of these messages is a faulty floppy disk. Try using the back-up copy of your disk.

Attempting to use a double-density disk drive to read a disk that was written on by a high-density disk drive can also cause one or more of these messages to appear on your screen. Remember that 360K disk drives cannot reliably read information written by 1.2M disk drives.

If these messages appear often, contact your service representative. Your disk drives may need adjustment or replacement.

```
+++ Non-maskable interrupt! +++
```

This message indicates a possible program execution error. It may also appear if power to your computer has been interrupted. When this occurs, any application program in progress is suspended, the register contents are saved, and the computer returns to the Monitor program for instructions.

```
+++ ERROR:  Wild Interrupt! +++
+++ ERROR:  Wild Hardware Interrupt! +++
FATAL:  Internal Stack Failure, System Halted
```

These messages occur when something happens that the computer was not expecting. As with a non-maskable interrupt, any application program in progress is suspended and the computer returns to the Monitor program. With these messages on the screen, however, the computer is usually locked up. Turn your computer off, leave it off for at least 30 seconds, and make sure that the keyboard, video monitor, and other peripherals are securely connected. Turn the computer back on and reboot the system. If this does not correct the problem, contact your service representative.

Testing from the Keyboard

In addition to the self-tests that run automatically each time you power-up your computer, there are a number of tests that you can run manually from the keyboard. Like the initial power-up tests, these tests are contained in the Monitor program.

The main advantage of these keyboard selectable tests is that they run continuously until you stop them or a malfunction or error is encountered. This is extremely useful when a problem is intermittent, time dependent, or the result of heat buildup.

Start the keyboard selectable tests from the Monitor prompt. Use the CTRL-ALT-INS or CTRL-ALT-ENTER key combination to enter the Monitor program.

1. At the Monitor prompt (->), type the word TEST and press the ENTER key. You will see the following display on your video monitor:

```
CHOOSE ONE OF THE FOLLOWING:

1.  DISK READ TEST
2.  KEYBOARD TEST
3.  BASE MEMORY TEST
4.  EXPANSION MEMORY TEST
5.  POWER-UP TEST
6.  EXIT

ENTER YOUR CHOICE:
```

2. Type the number (1-5) that precedes the test you want to run.

   With the exception of the keyboard test, any test you select will run until it detects an error. During each test, the computer displays a screen similar to this:

```
SAMPLE TEST

                    TEST COUNT = 1


TYPE <ESC> TO ABORT
```

3. Stop the test at any time by pressing the ESC key.

4. Press the ESC key a second time and the test menu will appear on your screen again. You may now run a different test by typing its number or exit the test program by typing the number 6.

Disk Read Test

Use the disk read test to check out your disk drives if you suspect a problem with them. It can check both floppy and hard disk drives. If you are experiencing disk errors, such as `+++ DISK ERROR: Sector not found! +++`, this test can help determine whether the disk or the disk drive is at fault.

This test checks the disk drive that your computer last attempted to boot from. To select the drive you wish to test, use the boot command from the Monitor program to boot from the drive you wish to test. When you run the disk read test, it will check the drive you booted from, even if the boot operation was not successful.

To test a disk drive:

1. Attempt to boot drive you wish to test.

   If you are testing a floppy disk drive, insert a blank, formatted disk in the drive to be tested. Do not use a valuable disk to test your drives! If the disk drive is defective, the disk could be damaged.

2. Run the Monitor program's test program and, when the test menu appears on the screen, press the 1 key.

   You will see the disk drive access LED light. Each time the computer successfully reads the boot track of the disk, the test count increments. If an error is detected, the message DEVICE ERROR is displayed.

3. Allow at least ten successful passes before you stop the test using the ESC key.

Keyboard Test

If you suspect a problem with your keyboard, use this test to check it. Run the Monitor program's test program, and when the test menu appears on the screen, press the 2 key. After the KEYBOARD

TEST message appears on the screen, press any letter, number or symbol key. The character you selected fills the screen and the character code for the key is displayed in the upper right corner of the display.

Base Memory and Expansion Memory Tests

Use the base memory test to verify that the first 640K of your computer's read/write memory is functioning properly. Run the Monitor program's test program, and when the test menu appears on the screen, press the 3 key. The message SYSTEM AND VIDEO MEMORY TEST is displayed and the computer beeps. The memory bank being tested is displayed in the upper right corner of the screen. After about 5 minutes, you will see patterns appear on the screen as the computer tests the video memory.

If you have upgraded your computer and it has more than 640K of read/write memory, use the expansion memory test to verify that the memory above 640K is functioning. Press the 4 key to run this test. As with the base memory test, the computer will beep while the test runs and the memory bank being tested will be displayed. If you attempt to run this test on a computer that has not been upgraded to more than 640K, the message NO EXPANSION MEMORY INSTALLED will be displayed.

These tests are more extensive than the power-up memory tests and take longer to run (5 to 10 minutes). If a fault is found, the same error messages used by the power-up memory tests are used to notify you of the problem.

Power-Up Test

When you press the 5 key and select this test, the computer continuously runs the self-tests that are run when you power-up or reset your computer. The test counter increments each time the computer successfully completes these tests.

Cleaning and Maintenance

Your computer is designed for years of trouble-free operation. The only maintenance required is regularly cleaning the cabinet and occasionally replacing the back-up battery.

Cleaning

The most common problem experienced by customers with electronic equipment of any kind is dust that builds up over a long period of time. Keep your computer and keyboard covered when they are not in use. Occasionally, you may want to wipe dust and fingerprints off the cabinets and monitor screen.

Use the following suggestions to clean your equipment. Any part of the computer that cannot be cleaned following these suggestions should be left to qualified service individuals.

- Before cleaning the equipment, make sure the power is off and the power cord is disconnected.
- Use only a cloth that has been slightly dampened with water or a nondetergent cleaning solution.
- Do not use spray liquids or a soaking-wet cloth.
- After wiping the computer with a damp cloth, make sure everything is dry before turning it back on.
- Do not attempt to clean floppy disks.

Replacing Your Backup Battery

A 3.6-volt, AA-size, lithium battery inside the computer provides power so the clock and calendar keep time even when the power is turned off. The battery also allows the Setup/Configuration Program data to be stored in memory when the power is turned off.

Occasionally, this battery must be replaced. A message will be displayed on the screen when your battery needs replacing. New batteries can be obtained from your service representative.

You need to partially disassemble your computer to replace the battery. This is simple if you follow the steps listed below, and you will have your computer up and running again in no time.

You need a slotted screw driver and a #2 phillips screwdriver to disassemble your computer. You should also have some small plastic bags, jars, or envelopes at hand. Use these to hold washers, nuts, screws and other parts you remove. It is much easier to reassemble your computer if the parts you removed are labeled and kept together. For example, you may want to put all the cover screws together in one jar, bag or envelope and set them aside with the cover.

1. If there is a hard disk drive installed in your computer, run the MS-DOS SHIP utility or other similar operating system utility that parks the read/write heads in the ship zone.

2. Turn off the computer and disconnect the power cords from the AC source and then from the computer, video monitor, and all pheripherals.

3. Disconnect the video monitor, keyboard, and all peripherals from the computer.

4. Use the instructions included in Chapter 5 and remove the cover of the computer. Save the seven screws; you need them to put your computer back together.

5. If your computer has a circuit card installed in the slot 1, you need to remove it to reach the lithium battery.

   - Remove the screw that secures the card to the computer chassis. Refer to Figure 5-3 if you are not sure which screw to remove. Savethe screw; you will need it to reinstall the card after you have replaced the battery.

   - Make a note of any ribbon cables or wires that are connected to the card. If you make some notes now about how and where these are connected, it will be simple to reconnect them.

   - Disconnect any cables from the card.

   - Remove the card from the computer by lifting it straight up and out of the computer.

   - Set the card aside. Remember to equalize the static electricity between the work surface and the card before you set it down. Hold the card in one hand, touch the work surface with your free hand, and then, with your hand still touching the work surface, set the card down.

6. The lithium battery is located on the backplane board , near the power supply, as shown in Figure 6-2. Lift it up and out of the battery holder and dispose of it.

WARNING: The lithium battery is not rechargeable. Do not attempt to recharge it. The lithium battery is also safety-sealed. Do not try to force it open; it may explode.

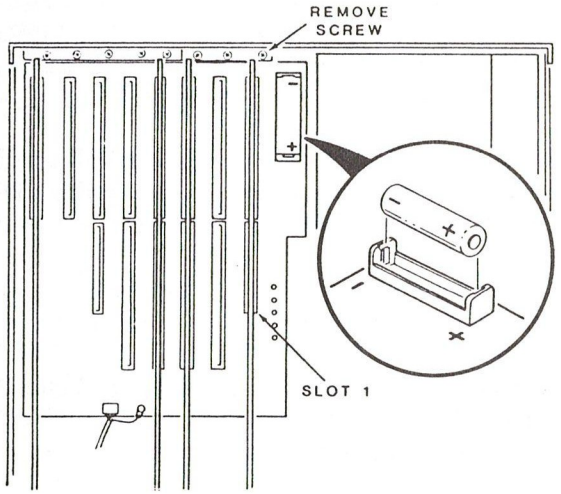

Figure 6-2. Locating the Backup Battery

7. Place the new battery in the battery holder, as shown in the inset of Figure 6-2. Be sure the + end of the battery is toward the + mark on the backplane board.

8. If you removed a circuit card from slot 1, you need to reinstall it in the computer.

   - Equalize the static electricity between you and the card by touching the work surface with one hand then, with your hand on the work surface, pick up the circuit card with your free hand.

   - Grasp the card in both hands and position it over the slot. Be sure the card is aligned with the card guide at the front of the computer and the slot in the back panel. Refer to Figure 5-3. if you have difficulty reinstalling the card.

   - Push the card down until it is firmly seated in the slot. Be careful; do not bend the card.

   - Secure the card to the computer chassis with the screw you removed earlier.

   - Use the notes you made when you removed the card and reconnect any cables you removed. Carefully align the cables with the connectors so no pins are bent when you press the cable onto the connector.

9. Make sure none of the cables extend above the top of the disk drive chassis and reinstall the cover. Secure it with the seven screws you removed earlier.

10. Reconnect the power cord, keyboard, video monitor, and any other peripherals to the computer, and then to their AC source.

11. Power-up your computer and run the Setup/Configuration Program. Chapter 3 contains detailed instructions for using the Setup/Configuration Program.

    Restore the correct time, date, and hardware information to your computer's memory.

Service Support

Your computer system is very reliable and should provide you with years of trouble-free performance. In those instances when you are unable to resolve a problem or need additional information, contact your local service representative. The computer's built-in tests, described earlier in this chapter, may assist the service representative in correcting any malfunctions, so be sure to document the test results.

If service is required, provide the following information about your computer. It will save time and help your service representative provide you with correct information or diagnose and repair your unit.

- The name, the model number, the drive type and any other numbers listed on the drive type label, and the serial number of your computer. This information is usually found on the back of your computer.

- The computer system configuration, including the type of video card installed, the make and model of your video monitor and any peripherals connected to your computer.

- A list of any optional or non-standard cards installed in your computer.

- The Monitor program version and the amount of memory installed in your computer. This information is found in the Monitor message that appears on your video display when you use the CTRL-ALT-INS key combination to enter the Monitor program.

- The BIOS version and operating system version you are using. In MS-DOS, this information can be obtained by loading the operating system into your computer's memory. At the operating system prompt (such as A> or C>), type VER and press the ENTER key.

- The specific problem you are experiencing.
- The error message displayed by the computer and the operation you were attempting at the time the message appeared.
- Any other information that will help describe your system and the difficulty you are experiencing.

Glossary

This short glossary contains commonly-used computer terms that you may encounter while working with your personal computer.

Address — The label, name, or number indentifying a memory location, register, or port where data or programming instructions are sent or stored.

Alphanumeric — Letters, numbers, punctuation marks, and symbols used to represent information or data.

Application — A problem or task that a computer is assigned to perform.

ASCII — American Standard Code for Information Interchantge. An industry standard used in transmitting information between your computer and other computers, printers, and peripheral devices.

Autoboot — The process of automatically loading an operating system into the computer's memory at power-up or after resetting the computer. *See also* Boot.

Backup — A copy of data or programs that is saved in case the original is damaged or destroyed. Floppy disks are generally used to save backup copies.

Base memory — The first 640K of read/write memory.

Baud rate — The rate at which information is transmitted between your computer and a printer, a modem, or other serial device.

Binary — A numbering system using only the digits 0 and 1, also called base 2.

BIOS — Basic Input/Output System. A program, resident in ROM, that provides control procedures for all system hardware and peripherals, including the keyboard, video monitor, disk drives, and printer.

Bit — A binary digit. The smallest unit of information used by a computer, expressed by a 0 or a 1.

Board — A printed circuit assembly that is mounted onto the chassis of a computer or other electronic device. Printed circuit cards may be plugged into a board. *See also* Card.

Boot — The process of loading or transferring an operating system from a disk into the computer's memory. Also referred to as booting up. *See also* Autoboot.

Break — The process of interrupting or temporarily halting the execution of a program. *See also* User Breakpoint.

Buffer — An auxiliary storage area for data. Many peripherals have buffers used to temporarily store data.

Bug — The cause of a compter malfunction. The term "bug" refers to hardware faults as well as to errors in software and firmware programs which prevent them from executing properly.

Byte — A group of eight consecutive bits. Address, instruction, and data words are made up of bytes. *See also* Word.

Call up — The process of entering a command or series of commands that cause the CPU to start a particular program and make it ready for your use. For example, the CTRL-ALT-INS key combination "calls up" the Monitor program.

Card — A printed circuit assembly that plugs into a printed circuit board. *See also* Board.

Centronics-type Interface — A parallel interface which has been accepted as a standard printer interface through common usage by a number of manufacturers. The parallel connector on the back of your computer is configured as a Centronics-type printer interface.

CGA — Color Graphics Adapter. A type of video display that has been accepted as a standard through common usage by a number

of manufacturers. It refers to the resolution of the display, number of colors, and graphics and text modes available.

Character — One of a set of symbols (letters, numbers, punctuation marks) used to express information.

Chip — An integrated circuit or the package that contains an integrated circuit. A chip is sometimes called an IC. *See also* DIP, IC.

Class B — One of two classes established by the Federal Communications Commission (FCC) for regulating the maximum amount of Radio Frequency Interference (RFI) a computer is allowed to radiate. All personal computers must meet Class B requirements.

CMOS — Complementary Metal-Oxide Semiconductor. A type of integrated circuit that requires very little power to operate. Pronounced see-moss. *See also* IC.

Code — A group of data, instruction, and/or address words specifically arranged to represent a character or to direct the computer to execute a particular application. *See also* Word, Command.

Command — A code that directs the computer to perform a particular operation or sequence of operations.

Configuration — The specific number and type of major components, such as disk drives, memory banks, circuit cards, and peripheral devices, that make up a computer system. Hardware programming jumper blocks and switches, operating system configuration, and firmware are all used to notify the microprocessor of your computer's configuration.

Coprocessor — An auxiliary microprocessor dedicated to a particular function, such as a numeric coprocessor, that works in conjunction with the microprocessor to speed up the processing of information.

CPU — Central Processing Unit. The circuitry that processes information, performs arithemtic functions, and controls the rest of the computer system. *See also* Microprocessor.

CRT — Cathode-Ray Tube. The television-like screen in a computer terminal or video monitor.

Cursor — A character, usually an underline or block, used to indicate a postion on the CRT.

D-type connector — A connector shaped like the capital letter D. D-type connectors are used for the video connector, the serial connector and the parallel connector on your computer.

DCE — Data Communications Equipment. An RS-232C serial connector found on serial peripheral devices, generally modems or printers. *See* RS-232C.

Debug — The process of identifying, locating and correcting any errors or faults in equipment or programs.

Default — A standard value or condition under which the computer operates, unless specifically directed to do otherwise. For example, unless you change the information stored by the Setup/Configuration Program, your computer assumes it has only 512K of memory to work with; 512K is the default value.

Density — The number of bits per inch (bpi) that can be stored on a disk.

DIP — Dual In-line Package. Any electronic device, usually rectangular in shape, with two parallel rows of leads that provide connections from the switches or circuits inside the device to printed circuit boards or cards.

Disk — A mass storage device. *See also* Floppy Disk, Hard Disk.

Disk drive — A device used to read and write information on disks.

Disk operating system (DOS) — *See* Operating System.

Display — The video screen used by the computer to present information to the operator. *See also* CRT.

DMA — Direct Memory Access. A technique that transfers information directly into or out of your computers memory without intervention by the CPU.

Double-density — A recording scheme used by floppy disk drives, also known as Modified Frequency Modulation (MFM) encoding. Floppy disks, designed and tested to accept data using this scheme, are called double-density disks.

DTE — Data Terminal Equipment. An RS-232C serial connector, generally found on computers that are sending or receiving serial data. The serial connector on your computer is a DTE connector. *See also* RS-232C.

EGA — Enhanced Graphics Adapter. A type of video display that has been accepted as a standard through common usage by a number of manufacturers. It refers to the resolution of the display, number of colors, and graphics and text modes available.

Execute — To perform a command or run a program.

Expansion memory — Read/write memory installed in addition to the 640K of base memory.

Field — A set of related characters, or related information. For example, the Time field on the Monitor program's Setup/Configuration Program screen.

Firmware — Programs, instructions, and data that are permanently stored in the computer's Read-Only Memory (ROM). Firmware may be used, but not altered, by the operator. The Monitor program is an example of firmware. *See also* Hardware, Software.

Floppy disk — A thin, flexible, plastic disk, coated with magnetic material and enclosed in a plastic jacket. It is used to store application programs and data and to transport information from one computer to another. Floppy disks, also called floppy diskettes,

flexible disks, or flexible diskettes, come in various sizes and capacities.

Formatting — The process of organizing the surface of a disk to prepare it to accept programs and data.

G — An abbreviation for Giga.

Giga — A prefix meaning 1,000,000,000 (10^9) when used with decimal numbers and 1,073,741,824 (2^{30}) when used with binary numbers.

Gigabyte — More computer memory than you even want to think about.

Hard copy — A paper copy of a computer's output.

Hard disk — A carefully machined and polished nonmagnetic metal platter, coated with magnetic material, used for the storage of programs and data. Hard disks may be permanently mounted inside the disk drive or may come in removable cartridges.

Hardware — The electronic and mechanical parts of your computer system, including the disk drives, circuit boards and cards, cables, cabinet, power supply, and peripheral devices. *See also* Firmware, Software.

Hex Math — Arithmetic functions performed on hexadecimal (or base 16) numbers. Your computer can add and subtract hex numbers using the Monitor command H.

Home — This term usually refers to the upper left corner of the video monitor screen, specifically to the first displayable character location.

IC — Integrated Circuit. A single piece of silicon or other semiconductor material which contains all the components of an electronic circuit. The term IC is also used to refer to the package that contains the integrated circuit. *See also* Chip, DIP.

Input — Information transferred into the computer.

I/O — Input/Output. *See* Input and Output.

Interface — A term used to describe the connection of one component, assembly, circuit board or circuit card to another. Interface is also used to describe the connection of a peripheral device to a computer. It applies to both the physical connector and the electronic signals at the connector.

Interrupt — A technique by which peripherals and the hardware inside your computer notify the CPU that they need information from, or have information for the CPU. When the CPU is interrupted, it temporarily suspends execution of the current program, calls a subroutine from its memory, and services the hardware. *See also* NMI.

K — An abbreviation for kilo. *See also* Kilo.

Keyboard — A device used to enter information into a computer. The keys are often arranged like those on a typewriter or calculator.

Key click — An audible signal produced by the computer when a key is pressed.

Kilo — A prefix meaning 1,000 when used with decimal expressions such as kilometer, or 1,024 (2^{10}) when used with binary expressions such as kilobyte. *See also* Kilobit, Kilobyte.

Kilobit — A unit of measurement of computer memory that equals 1,024 bits. *See also* Bit.

Kilobyte — A unit of measurement of computer memory that equals 1,024 bytes. *See also* Byte.

LED — Light-emitting diode. An electronic device that glows when current flows through it.

Load — The process of entering information into the computer's memory from a disk or peripheral device.

M — An abbreviation for mega. *See also* Mega, Megabyte.

Machine language — A programming language that uses only numbers. Programmers use it to work directly with the CPU.

Mega — A prefix meaning one million (10^6) when used with decimal numbers or 1,048,576 (2^{20}) when used with binary expressions such as megabyte. *See also* Megabyte.

Megabyte — A unit of measurement of computer memory that equals 1,048,576 bytes. *See also* Byte.

Memory — Integrated circuits used to store data and programs. *See also* RAM and ROM.

Microprocessor — An integrated circuit package that contains a CPU. *See also* CPU.

Modem — A device that converts digital signals from a computer to signals that are compatible with telephone lines or other communications facilities.

Monitor —
1. A control program resident in your computer's ROM.
2. A peripheral device used to display information, such as a CRT.

Monochrome display — A single color video display, usually black and white, black and green, or black and amber.

NMI — Nonmaskable Interrupt. An interrupt that the CPU cannot ignore, disable, or turn-off.

Operating system — A collection of programs stored on disk that provides instructions for the basic operation and management of a disk-based computer system.

Output — Information transferred from the computer to a disk drive, video display, other peripheral device, or another computer.

Parallel — A method of communicating digital information in which several data bits are transmitted simultaneously,each over its own channel or line.

Parity — A count of the number of ones in a binary number, expressed as even or odd, used to check the validity of data that is stored, transmitted or received.

Peripheral — Any equipment that is connected to the computer, including video monitors, printers, and modems.

Port — The connector and associated circuitry through which information is transferred into and out of the computer.

Program — A set of computer instructions which, when executed, causes the computer to perform an operation. *See also* Firmware, Software.

Prompt — A symbol or message indicating that the computer is ready for operator input.

Protocol — A standard method of transferring data. The term usually applies to serial data communication.

QWERTY — A standard arrangement of keys on a computer or a typewriter keyboard. The term refers to the order of the first six letters, read from left to right, in the top row of alphabet keys.

RAM — Random-Access Memory. You can change the information stored in this type of computer memory. It is also known as read/write memory. The contents of RAM are lost when you turn your computer off.

Read/write head — The part of the disk drive that transfers information to and from a disk.

Read/write memory — *See* RAM.

Reset — The process of restoring equipment to its initial, power-up state.

Resolution — Refers to the sharpness of the display on a video monitor.

RGB — Red-Green-Blue. A set of separate video signals, used by color video monitors to produce a color display, and by monochrome monitors to produce different shades of one color.

RGBI — Red-Green-Blue-Intensity. A set of separate video signals used by color video monitors to produce a color display, and by monochrome monitors to produce different shades of one color. The addition of the intensity signal allows many more colors or shades to be displayed. *See also* RGB.

ROM — Read-Only Memory. Memory that can be read but not altered. The contents of ROM are not lost when you turn your computer off.

RS-232C — An industry standard for wiring serial connectors. The serial connector on the back of your computer is an RS-232C connector.

Serial — A method of communicating digital information in which the data bits are transmitted sequentially, one at a time.

Ship zone — The space on a hard disk that is reserved for parking the read/write heads so that data will not be destroyed if the heads touch the disks while the computer is being moved, disassembled, or shipped to another location.

Software — Any applications program that can be loaded into a computer.

TTL — Transistor-Transistor Logic. A type of integrated circuit that accepts input and produces output at either of two voltages. Since the voltage levels are standard, TTL-compatible devices (like TTL-compatible video monitors) can be connected directly to each other, without the need for special interfacing circuitry.

User breakpoint — A debugging tool used by programmers to select a point in a program, temporarily stop the execution of a

program at that point, check the results, and then continue the execution of the program.

Utility — A program that accomplishes a specific purpose. For example, the MS-DOS utility SHIP directs the computer to move a hard disk drive's read/write heads to the ship zone and park them there so the computer can be moved without damage. Most utilites are included as a part of an operating system, although some (like SORT routines) are sold as separate packages.

Word — A byte or group of bytes that represent a single address, piece of data, or instruction. Words may be 8, 16, or 32 bits long. *See also* Bit, Byte.

Index

AC power rating, 1-6
Autobooting, 1-18

Backplane board, 4-5
  Back-up battery, 4-5, 6-13
  Keyboard connector pinout, 4-6
Base memory test, 6-12
Battery replacement, 6-13
Booting manually, 1-17

Checklist of common problems, 6-3
Cleaning, 6-13
Clock and calendar, setting, 1-12
Control key combinations, 2-7, 1-10, 1-11, 1-17
  CTRL-ALT-DEL, 2-7, 1-17
  CTRL-ALT-ENTER, 2-7, 1-11
  CTRL-ALT-INS, 2-7, 1-10
  CTRL-C, 2-6
  CTRL-S, 2-6
CPU/memory card, 4-6
  80286, 4-7
  80287, 4-7
  Coprocessor, 4-8
  CPU/memory card jumpers, 4-9
  Microprocessor, 4-7
  Read-only memory (RAM), 4-9
  Read/write memory (ROM), 4-9

Daylight savings time feature, 1-14, 3-8
Diagnostic LEDs, 6-5
Disassembly, 5-1, 6-14
  Circuit card removal, 5-5
  Cover, 5-2
  Preparation, 5-1
Disk, 2-18
  Backups, 2-21
  Floppy, 2-18
  Floppy disk care, 2-23
  Formatting, 2-21
  Hard, 2-20
  Hard disk care, 2-24
  Labeling, 2-23
  Monitoring space, 2-23

Disk (continued)
Organizing data, 2-22
Shipping zones, 2-20
Write-protecting, 2-21
Disk drive, 2-13
Disk drive latch, 2-14
Disk load slot, 2-14
Drive access indicator, 2-15
Drive identification, 2-13
Floppy, 2-14
Floppy disk drive care, 2-16
Hard, 2-16
Hard disk drive care, 2-17
Disk read test, 6-11

Error messages, 6-4
Expansion memory, 6-12
Memory expansion card jumpers, 4-22
Expansion options, 4-1

Hardware, 4-2
15-pin video connector pinout, 4-19
80286, 4-7
80287, 4-7
9-pin video connector pinout, 4-19
Backplane board, 4-5
Clock and calendar, 4-12
Coprocessor, 4-8
CPU/memory card, 4-6
CPU/memory card jumpers, 4-9
Direct memory access (DMA), 4-13
Disk drive chassis, 4-15
Disk drive controller card, 4-15
Hardware expansion, 5-1
Hardware programming jumper blocks, 4-2
Input/output card, 4-10
Input/output card jumpers, 4-13
Keyboard connector pinout, 4-6
Memory expansion card jumpers, 4-22
Microprocessor, 4-7
Optional memory expansion cards, 4-21
Parallel connector pinout, 4-11
Parallel ports, 4-10
Power supply, 4-3
Read-only memory (ROM), 4-9
Read/write memory (RAM), 4-9
Serial connector pinout, 4-12
Serial ports, 4-12

Hardware (continued)
Video controller card, 4-16
Video controller card configuration, 4-17, 4-20
Video controller card jumpers, 4-20

Input/output card, 4-10
Direct memory access (DMA), 4-13
Input/output card jumpers, 4-13
Parallel connector pinout, 4-11
Parallel ports, 4-10
Serial connector pinout, 4-12
Serial ports, 4-12
Installation, 1-1
Circuit card, 5-4
Integrated circuit, 5-7
Keyboard, 1-5
Peripherals, 1-4
Power cord, 1-5
Video monitor, 1-4

Keyboard, 2-1
Adjustment, 1-6
Alphanumeric keys, 2-4
Arrangement, 2-2
AT-XT compatibility, 2-1
Audible feedback, 2-3
Auto-repeat feature, 2-3
Control keypad, 2-9
Cursor control keypad, 2-9
Function keys, 2-12
Installation, 1-5
Numeric keypad, 2-8
Test, 6-11
Keys, 2-2
ALT, 2-7
BACKSPACE, 2-6
BREAK, 2-10
CAPS LOCK, 2-5
CTRL (control), 2-6
DEL (Delete), 2-10
END, 2-12
ENTER, 2-5
ESC, 2-12
F1-F12, 2-12
HOME, 2-11
INS (insert), 2-10
NUM LOCK, 2-8
PAGE DOWN (PgDn), 2-11

Keys (continued)
PAGE UP (PgUp), 2-11
PAUSE, 2-10
PRINT SCREEN, 2-9
RETURN, 2-5
SCROLL LOCK, 2-10
SHIFT, 2-5
Space Bar, 2-6
SYS REQ (system request), 2-9
TAB, 2-6

Line voltage select switch, 1-3
Loading a disk, 1-15

Maintenance, 6-13
Memory expansion, 4-21
Monitor program, 3-1
Assembly language debugger commands, 3-16
Base memory size, 3-8
Boot command, 3-4
Boot drive, 3-10
Booting floppy disk drives, 3-4
Booting hard disk drives, 3-5
Color bar command, 3-15
CTRL-ALT-ENTER, 3-2
CTRL-ALT-INS, 3-2
Date, 3-8
Display memory command, 3-16
DST, 3-8
Entering, 1-10, 3-2
Examine memory command, 3-17
Examine registers command, 3-17
Execute (go) command, 3-17
Expansion memory, 3-9
Fill memory command, 3-17
Floppy drive 0, 3-9
Floppy drive 1, 3-9
Hard disk drive 0, 3-11
Hard disk drive 1, 3-11
Hard disk drive types, 3-12
Hex math command, 3-17
Input from port command, 3-17
Monitor commands, 3-3
Monitor prompt, 3-2
Move memory block command, 3-17
Output from port command, 3-17
Scroll mode command, 3-12
Scroll modes, 3-14

Monitor program (continued)
Search memory command, 3-18
SETUP command, 3-6
Time, 3-8
Trace command, 3-18
Unassemble command, 3-18
User selectable tests, 3-15
Video display, 3-10
Video mode command, 3-12
Video modes, 3-13
Video refresh rate, 3-11
Z-200 Hardware Setup/Configuration program, 3-6

Operating system, 1-18

Peripherals, installation, 1-4
Power cord, installation, 1-5
Power-up procedure, 1-8
Power-up tests, 6-4, 6-12

Resetting, 1-17

Self-tests, 1-9
Service support, 6-17
Specifications, 4-22

Testing from the keyboard, 6-9

Video connectors, 1-4
15-pin connector pinout, 4-19
9-pin connector pinout, 4-19
Video controller card configuration, 4-17, 4-20
Video monitor, installation, 1-4

595-3812-02